Multiple Application Platform

MAP Series Passive Component Testing (PCT) Application Programming Guide

22112369-346 R002, Standard

October 2025

© Copyright 2025 VIAVI Solutions Inc. All rights reserved. VIAVI and the VIAVI logo are trademarks of VIAVI Solutions Inc. (“VIAVI”). All other trademarks and registered trademarks are the property of their respective owners. No part of this guide may be reproduced or transmitted, electronically or otherwise, without written permission of the publisher.

Reproduction and distribution of this guide is authorized for US Government purposes only.

VIAVI Solutions Inc. is a trademark of VIAVI Solutions Inc. in the United States and other countries. Microsoft, Windows, Windows CE, Windows NT, MS-DOS, Excel, Word and Microsoft Internet Explorer are either trademarks or registered trademarks of Microsoft Corporation in the United States and/or other countries. All trademarks and registered trademarks are the property of their respective companies.

Every effort was made to ensure that the information in this manual was accurate at the time of publication. However, information is subject to change without notice, and VIAVI reserves the right to provide an addendum to this manual with information not available at the time that this manual was created.

Specifications, terms, and conditions are subject to change without notice. The provision of hardware, services, and/or software are subject to the VIAVI standard terms and conditions, available at www.viavisolutions.com/terms.

Contents

About this guide ix

Chapter 1 Programming with the PCT Super Application 1-1

Accessing the PCT Super Application command line interface 1-1

Chapter 2 Common cassette commands 2-1

:BUSY? 2-2
:CONFig? 2-3
:DEVice:INFOrmation? 2-4
:FAULt:DEVice? 2-5
:FAULt:SLOT? 2-6
:INFOrmation? 2-7
:LOCK 2-8
:LOCK? 2-9
:RESet 2-10
:STATus:DEVice? 2-11
:STATus:RESet 2-12
:SYSTem:ERRor? 2-13
:TEST? 2-14

Chapter 3 System commands 3-1

:SUPer:EXIT 3-3
:SUPer:LAUNch 3-4
:SUPer:STATus? 3-5
:SYSTem:DATe 3-6
:SYSTem:DATe? 3-7
:SYSTem:ERRor? 3-8
:SYSTem:FAULt:CHASsis? 3-9
:SYSTem:FAULt:SUMMary? 3-10
:SYSTem:GPIB 3-11
:SYSTem:GPIB? 3-12
:SYSTem:INFO? 3-13
:SYSTem:INTLock 3-14
:SYSTem:INTLock? 3-15
:SYSTem:INTLock:STATe? 3-16
:SYSTem:INVentory? 3-17
:SYSTem:IP:LIST? 3-18
:SYSTem:LAYout? 3-19
:SYSTem:LAYout:PORT? 3-20
:SYSTem:LEGAcy:MODE 3-21

:SYSTem:LEGAcy:MODE? 3-22
:SYSTem:LIC? 3-23
:SYSTem:LOCK:RELEase 3-24
:SYSTem:SHUTdown 3-25
:SYSTem:STATus? 3-26
:SYSTem:TEMP? 3-27
:SYSTem:TIMe? 3-28
Chapter 4 System integration commands 4-1
:FACTory:CALibration? 4-3
:FACTory:CALibration:DATe? 4-4
:FACTory:COMMit 4-5
:FACTory:CONFig:BIDir 4-6
:FACTory:CONFig:BIDir? 4-7
:FACTory:CONFig:CORE 4-8
:FACTory:CONFig:CORE? 4-9
:FACTory:CONFig:LPOW 4-10
:FACTory:CONFig:LPOW? 4-11
:FACTory:CONFig:OPM 4-12
:FACTory:CONFig:OPM? 4-13
:FACTory:CONFig:SWITch 4-14
:FACTory:CONFig:SWITch? 4-15
:FACTory:CONFig:SWITch:SIZe 4-16
:FACTory:MEASure:FPDistance? 4-17
:FACTory:MEASure:FPLoss? 4-18
:FACTory:MEASure:FPRatio? 4-19
:FACTory:MEASure:LOOP? 4-20
:FACTory:MEASure:OPMP? 4-21
:FACTory:MEASure:RANGe? 4-22
:FACTory:MEASure:STARt 4-23
:FACTory:MEASure:SWDistance? 4-24
:FACTory:MEASure:SWLoss? 4-25
:FACTory:SETup:SWITch 4-26
:FACTory:SETup:SWITch? 4-27
:FACTory:RESet 4-28
Chapter 5 PCT commands 5-1
*ACTive? 5-6
*REM 5-7
:MEASure:ALL? 5-8
:MEASure:DISTance? 5-9
:MEASure:FASTil 5-10

:MEASure:FASTil? 5-11
:MEASure:HELix 5-12
:MEASure:HELix? 5-13
:MEASure:IL? 5-14
:MEASure:ILLA 5-15
:MEASure:ILLA? 5-16
:MEASure:LENGth? 5-17
:MEASure:ORL? 5-18
:MEASure:ORL:PRESet? 5-19
:MEASure:ORL:SETup 5-20
:MEASure:ORL:SETup? 5-21
:MEASure:ORL:ZONe? 5-22
:MEASure:POWer? 5-23
:MEASure:REF2step 5-24
:MEASure:REF2step? 5-25
:MEASure:REFAlt 5-26
:MEASure:REFAlt? 5-27
:MEASure:RESet 5-28
:MEASure:SEIL 5-29
:MEASure:SEIL? 5-30
:MEASure:STARt 5-31
:MEASure:STATe? 5-32
:MEASure:STOP 5-33
:PATH:BIDIR 5-34
:PATH:BIDIR? 5-35
:PATH:CHANnel 5-36
:PATH:CHANnel? 5-37
:PATH:CHANnel:AVAilable? 5-38
:PATH:CONNection 5-39
:PATH:CONNection? 5-40
:PATH:DUT:LENGth 5-41
:PATH:DUT:LENGth? 5-42
:PATH:DUT:LENGth:AUTO 5-43
:PATH:DUT:LENGth:AUTO? 5-44
:PATH:EOF:MIN 5-45
:PATH:EOF:MIN? 5-46
:PATH:JUMPer:IL 5-47
:PATH:JUMPer:IL? 5-48
:PATH:JUMPer:IL:AUTO 5-49
:PATH:JUMPer:IL:AUTO? 5-50

:PATH:JUMPer:LENGth 5-51
:PATH:JUMPer:LENGth? 5-52
:PATH:JUMPer:LENGth:AUTO 5-53
:PATH:JUMPer:LENGth:AUTO? 5-54
:PATH:JUMPer:RESet 5-55
:PATH:JUMPer:RESet:MEASure 5-56
:PATH:LAUNch 5-57
:PATH:LAUNch? 5-58
:PATH:LAUNch:AVAilable? 5-59
:PATH:LIST 5-60
:PATH:LIST? 5-61
:PATH:RECeive 5-62
:PATH:RECeive? 5-63
:PMAP:ENABle 5-64
:PMAP:ENABle? 5-65
:PMAP:MEASure:ALL 5-66
:PMAP:MEASure:LIVE 5-67
:PMAP:MEASure:LIVE? 5-68
:PMAP:MEASure:VALid 5-69
:PMAP:MEASure:VALid? 5-70
:PMAP:PATH:LINK? 5-71
:PMAP:PATH:SELect 5-72
:PMAP:PATH:SELect? 5-73
:PMAP:PATH:SIZE? 5-74
:PMAP:SETup:FIRSt? 5-75
:PMAP:SETup:INIT:LIST 5-76
:PMAP:SETup:INIT:RANGe 5-77
:PMAP:SETup:LAST? 5-78
:PMAP:SETup:LINK 5-79
:PMAP:SETup:LIST? 5-80
:PMAP:SETup:LOCK 5-81
:PMAP:SETup:LOCK? 5-82
:PMAP:SETup:MODE? 5-83
:PMAP:SETup:RESet 5-84
:PMAP:SETup:SIZE? 5-85
:SENSe:ATIMe 5-86
:SENSe:ATIMe? 5-87
:SENSe:ATIMe:AVAilable? 5-88
:SENSe:FUNCtion 5-89
:SENSe:FUNCtion? 5-90

:SENSe:ILONly 5-91
:SENSe:ILONly? 5-92
:SENSe:OPM 5-93
:SENSe:OPM? 5-94
:SENSe:RANGe 5-95
:SENSe:RANGe? 5-96
:SENSe:TEMPerature 5-97
:SENSe:TEMPerature? 5-98
:SOURce:CONTinuous 5-99
:SOURce:CONTinuous? 5-100
:SOURce:LIST 5-101
:SOURce:LIST? 5-102
:SOURce:WARMup 5-103
:SOURce:WARMup? 5-104
:SOURce:WAVelength 5-105
:SOURce:WAVelength? 5-106
:SOURce:WAVelength:AVAilable? 5-107
:SYSTem:WARNing? 5-108
OPM commands 5-109
:FETCh:LOSS? 5-109
:FETCh:ORL? 5-110
:FETCh:POWer? 5-111
:SENSe:POWer:DARK 5-112
:SENSe:POWer:DARK? 5-113
:SENSe:POWer:DARK:FACTory 5-114
:SENSe:POWer:MODE 5-115
:SENSe:POWer:MODE? 5-116

Appendix A Common SCPI commands A-1

*CLS A-2
*ESE A-2
*ESE? A-2
*ESR? A-3
*IDN? A-3
*OPC A-4
*OPC? A-4
*RCL A-4
*RST A-5
*SAV A-5
*SRE A-6
*SRE? A-6

*STB? A-7
*TST? A-7
*WAI A-7
Appendix B Error codes B-1
Appendix C Warning codes C-1
Appendix D IEEE 488.2 registers D-1
Standard Status Byte register D-2
Standard Event Status register D-3
Service Request Enable register D-3
Standard Event Status Enable register D-4
Reading and writing register information D-4
Appendix E Mnemonics E-1
Appendix F Document revision history F-1

About this guide

This guide provides information about the SCPI programming interface for MAP PCT, including supported commands. It replaces the section “Remote Commands” in the *MAP Series mORL-A1, mIL-A2 and PCT Application Framework Installation and User Guide*, 22112369-260.

The following update appears in this revision:

- Added the following command descriptions:
  - :MEASure:HELix and :MEASure:HELix?
  - :MEASure:ILLA and :MEASure:ILLA?

Programming with the PCT Super Application

The PCT Super Application (super application) can be used with up to three PCT modules present in a MAP Series mainframe; however, only one PCT module can be active at a time.

Each PCT module present in a mainframe features its own remote interface, with a TCP server that listens at a separate port. While multiple PCT modules are present in a mainframe and the super application is running, an operator can connect to and use a particular PCT module with the super application and, when required, end the TCP connection to that module and connect to a different PCT module. This enables the operator to switch between PCT modules for use with the PCT configuration and the super application.

Accessing the PCT Super Application command line interface

Use this procedure to start the PCT Super Application (super application) command line interface and then connect to a PCT module.

Step 1. Start a terminal emulator session to establish a TCP/IP connection to the mainframe controller at port 8100.

Step 2. Use the command :SYSTem:LAYout:PORT? to retrieve the port number of the PCT module (PCT) you want to use; for example:

```
:SYST:LAY:PORT?
CMR MAP-300 8100,1 PCT 8301,2 PCT 8302,3 OSW 8203,4 OSW 8204,5 SPN 0,6 TFX
8206,7 SPN 0,8 VOA 8208
```

Step 3. Use the command :SUPer:LAUNch to start the super application on the system; for example:

```
:SUP:LAUN PCT
```

Step 4. Optionally, use the command :SUPer:STATus? to confirm that the super application is running; for example:

```
:SUP:STAT? PCT
1
```

Step 5. End the TCP/IP connection to port 8100.

Step 6. Establish a TCP/IP connection to the PCT module at the port number retrieved at Step 1: for example, 8301 or 8302.

Step 7. Use the *REM command to set the PCT module to accept remote commands from the current connection:

```
*REM
```

Step 8. Optionally, use the command *ACTive? to confirm the status of the PCT module; for example:

```
*ACT?
1
```

— End —

Common cassette commands

	To use the cassette commands described in this section, establish a TCP/IP connection to either the PCT module (see "Accessing the PCT Super Application command line interface" on page 1-1) or to another cassette present in the system (for example, a MAP Series Optical Switch (mOSW) or MAP Series Optical Power Meter (mOPM).

Notes:

- The command descriptions in this section are specific to the PCT module. For information specific to other cassettes that are present in a PCT system, refer to the user guide for the cassette type.
- The cassette command :PROC:NDEV? is not supported on the PCT module.

Table 2-1: Summary of cassette commands

Command	Description
:BUSY?	Returns a summary of the device-busy status for a cassette.
:CONFig?	Returns configuration information for the cassette.
:DEVice:INFOrmation?	Returns the description of a device.
:FAULt:DEVice?	Returns the contents of the Device Fault register.
:FAULt:SLOT?	Returns the contents of the Slot Fault register.
:INFOrmation?	Returns cassette information.
:LOCK	Sets the lock state for a cassette.
:LOCK?	Returns the lock state for a cassette.
:RESet	Restarts a cassette and restores all factory settings.
:STATus:DEVice?	Returns the contents of the Status register for a device.
:STATus:RESet	Clears bits in the Device Status register
:SYSTem:ERRor?	Returns the first code written to the cassette error queue.
:TEST?	Initiates a self test of the cassette and returns the result.

:BUSY?

Description	Returns a summary of the device-busy status for a cassette.	
Input	:BUSY?	
Response	*<status>*	
Parameter	**Description**	**Value/Range of Values**
status	Device-busy status summary	• 0 = All devices available • 1 = At least one device busy
Example	`:BUSY?` `1`	
Busy?	—	
Error Messages	Standard error messages (see Error codes)	

:CONFig?

Description	Returns configuration information for the cassette. **Note:** Parameters, values, and example in the description specific to the PCT module (mORL cassette).	
Input	:CONFig?	
Response	*<device> <name> <fiber> <outputs> <sw1Channels> <sw2Channels> <wavelength1> <wavelength2> <wavelength2> <wavelength2> <wavelength4> <wavelength5> <wavelength6> <core> <opm>*	
Parameters	**Description**	**Value/Range of values**
device	Device number	1
name	Device type	PCT
fiber	Fiber type	SM9 | MM50 | MM62.5
outputs	Outputs	• 1 = 1 output (no 2x2 switch option) • 2 = 2 outputs with bidirectional enabled • 3 = 2 outputs with bidirectional disabled
sw1Channels	Switch 1 channel count	• 1 = No 1xN switch
sw2Channels	Switch 2 channel count	• 1 = No 1xN switch
wavelength1 to wavelength6	Available wavelengths (nm)	• 0 = Not installed • 850 1300 • 1310 1550 • 1310 1490 1550 1625
core	Core type	• 0 = Single core • 1 = Dual core
opm	Number of remote OPM detector heads	0 to *n*
Example	`:CONF?` `1 PCT SM9 2 1 1 1310 1490 1550 1625 0 0 0 0`	
Busy?	—	
Error Messages	Standard error messages (see Error codes)	

:DEVice:INFOrmation?

Description	Returns the description of a device.	
Input	:DEVice :INFOrmation? <*device*>	
Response	<*description*>	
Parameters	**Description**	**Value/Range of Values**
<*device*>	Device number	1
<*description*>	Device description	Passive Component Tester
Example	`:DEV:INFO? 1` `Passive Component Tester`	
Busy?	—	
Error Messages	Standard error messages (see Error codes)	

:FAULt:DEVice?

Description	Returns the contents of the Device Fault register.	
Input	:FAULt:DEVice? <*device*>	
Response	<*registerValue*>	
Parameters	**Description**	**Value/Range of values**
device	Device number	1
registerValue	A value that corresponds to the binary-weighted sum of all bits in the register	0 (default) to 255
Example	`:FAUL:DEV? 1` `0`	
Busy?	—	
Error Messages	Standard error messages (see Error codes)	

Device Fault Register							
Bit 7	**Bit 6**	**Bit 5**	**Bit 4**	**Bit 3**	**Bit 2**	**Bit 1**	**Bit 0**
Reserved	Reserved	Reserved	Reserved	Reserved	Reserved	Reserved	Reserved

Notes:
- A bit value of 1 indicates a TRUE condition.
- When a bit is TRUE, the device fault bit of the Slot Fault Register is also TRUE. For information, see :FAULt:SLOT? on page 2-6.
- A device without a fault always returns the value 0.
- The value of a Reserved (unused) bit is always 0.

:FAULt:SLOT?

Description	Returns the contents of the Slot Fault register.	
Input	:FAULt:SLOT?	
Response	*<registerValue>*	
Parameter	**Description**	**Value/Range of values**
registerValue	A value that corresponds to the binary-weighted sum of all bits in the register	0 (default) to 255
Example	`:FAUL:SLOT?` `0`	
Busy?	—	
Error Messages	Standard error messages (see Error codes)	

Slot Fault Register							
Bit 7	**Bit 6**	**Bit 5**	**Bit 4**	**Bit 3**	**Bit 2**	**Bit 1**	**Bit 0**
Reserved	Reserved	Reserved	Reserved	Reserved	Reserved	Reserved	Reserved

Notes:

- A bit value of 1 indicates a TRUE condition.
- The value of a Reserved (unused) bit is always 0.

:INFOrmation?

Description	Returns cassette information.
Input	:INFO?
Response	*<serialNumber>,<partNumber>,<firmwareRev>,<moduleRev1>,<moduleRev2>,<hardwareRev>, <assemblyDate>,<description>*
Parameters	**Description**
serialNumber	Serial number
partNumber	Part number
firmwareRev	Firmware version
moduleRev1	Module firmware version
moduleRev2	Module firmware version
hardwareRev	Hardware revision
assemblyDate	Cassette assembly date in the format YYYYMMDD
description	Cassette description
Example	`:INFO?` `600278,MORL-A13456-MBID,4.3.3,8.4,1.9.12,008,2010.11.08,ORL Module`
Busy?	—
Error Messages	Standard error messages (see Error codes)

:LOCK

Description	Sets the lock state for a cassette.	
Input	:LOCK *<state>,<name>,<ipID>*	
Parameters	**Description**	**Value/Range of Values**
state	Lock state of the application	• 0 = Unlock (default) • 1 = Lock
name	Owner of the lock state	String containing 1 to 20 alphanumeric characters
ipID	Source of the lock state	*ipAddress* | LOCAL (local mainframe)
Examples	• `:LOCK 1,Tester,LOCAL` • `:LOCK 1,Tester,10.14.21.35`	
Busy?	—	
Error Messages	Standard error messages (see Error codes)	

:LOCK?

Description	Returns the lock state for a cassette.	
Input	:LOCK?	
Response	<*state*>[,<*ownerName*>,<*ipID*>]	
Parameters	**Description**	**Value/Range of Values**
state	Lock state of the application	• 0 = Unlocked (default) • 1 = Locked
ownerName	Owner of the lock state	String containing 1 to 20 alphanumeric characters
ipID	Source of the lock state	*IP address* | LOCAL = local chassis
Example	`:LOCK?` `0`	
Busy?	—	
Error Messages	Standard error messages (see Error codes)	

:RESet

Description	Restarts the cassette and restores all factory settings. **Notes:** • While the cassette restarts and the system acquires its configuration information, it might appear as though the cassette is not present in the system. • The lock state (locked or unlocked) of the cassette is not maintained. • Executes the same reset as the *RST command. For information about the *RST command, see the programming guide for the MAP Series mainframe platform.
Input	:RESet
Example	`:RES`
Busy?	—
Error Messages	Standard error messages (see Error codes)

:STATus:DEVice?

Description	Returns the contents of the Status register for a device.	
Input	:STATus:DEVice? <*device*>	
Response	<*registerValue*>	
Parameters	**Description**	**Value/Range of Values**
device	Device number	1
registerValue	A value that corresponds to the binary-weighted sum of all bits in the register	0 (default) to 255
Example	`:STAT:DEV? 1` `0`	
Busy?	—	
Error Messages	Standard error messages (see Error codes)	

Device Status Register							
Bit 7	**Bit 6**	**Bit 5**	**Bit 4**	**Bit 3**	**Bit 2**	**Bit 1**	**Bit 0**
Reserved	Reserved	Reserved	Reserved	Reserved	Reserved	Reserved	Reserved

Notes:
- A bit value of 1 indicates a TRUE condition.
- The value of a Reserved (unused) bit is always 0.

:STATus:RESet

Description	Clears bits in the Device Status register	
Input	:STATus:RESet? <*device*>	
Parameters	**Description**	**Value/Range of Values**
device	Device number	1
Example	`:STAT:RES? 1`	
Busy?	—	
Error Messages	Standard error messages (see Error codes)	

Device Status Register							
Bit 7	**Bit 6**	**Bit 5**	**Bit 4**	**Bit 3**	**Bit 2**	**Bit 1**	**Bit 0**
No Change	No Change	No Change	No Change	No Change	No Change	No Change	No Change

Notes:

- A bit value of 1 indicates a TRUE condition.
- The value of a Reserved (unused) bit is always 0.

:SYSTem:ERRor?

Description	Returns the first code written to the cassette error queue.	
Input	:SYSTem:ERRor?	
Response	*<message>*	
Parameter	**Description**	**Value/Range of Values**
code	Code and message	See "Error codes" on page B-1.

Examples	• `:SYST:ERR?`
	`-100, "Command error"`
	• `:SYST:ERR?`
	`0, "No Error"`	

Busy?	—	
Error Messages	Standard error messages (see Error codes)	

:TEST?

Description	Initiates a self-test of the cassette and returns the results. **Note:** Executes the same self-test as the *TST command. For information about the *TST command, see the programming guide for the MAP Series mainframe platform.	
Input	:TEST?	
Response	*<result>*	
Parameter	**Description**	**Value/Range of Values**
result	Self-test result	• 0 = Pass • 1 = Fail
Example	`:TEST?` `0`	
Busy?	—	
Error Messages	Standard error messages (see Error codes)	

System commands

	To use the commands described in this section, establish a TCP/IP connection to the MAP Series mainframe controller at port 8100.

Table 3-1: Summary of system commands

Command	Description
:SUPer:EXIT	Exits the PCT super application.
:SUPer:LAUNch	Starts the PCT super application.
:SUPer:STATus?	Returns the status of the PCT super application.
:SYSTem:DATe	Sets the system date and time.
:SYSTem:DATe?	Returns the system date and time.
:SYSTem:ERRor?	Returns the first code written to the system error queue.
:SYSTem:FAULt:CHASsis?	Returns the contents of the system fault register.
:SYSTem:FAULt:SUMMary?	Returns a summary of all faults asserted by individual cassette slots.
:SYSTem:GPIB	Sets the address of the GPIB interface.
:SYSTem:GPIB?	Returns the address of the GPIB interface.
:SYSTem:INFO?	Returns hardware information for the mainframe and components present in the mainframe.
:SYSTem:INTLock	Sets the state of the software interlock.
:SYSTem:INTLock?	Returns the state of the software interlock.
:SYSTem:INTLock:STATe?	Returns the system, software, and remote interlock states.
:SYSTem:INVentory?	Returns hardware and firmware information about each cassette present in the mainframe.
:SYSTem:IP:LIST?	Returns the IP addresses for the local and remote mainframes.
:SYSTem:LAYout?	Returns slot information for the mainframe.

Table 3-1: Summary of system commands (continued)

Command	Description
:SYSTem:LAYout:PORT?	Returns the TCP/IP port number for access to each cassette present in the mainframe.
:SYSTem:LEGAcy:MODE	Sets the state of legacy MAP mode.
:SYSTem:LEGAcy:MODE?	Returns the state of legacy MAP mode.
:SYSTem:LIC?	Returns the software-license inventory.
:SYSTem:LOCK:RELEase	Unlocks a locked cassette or system application, overriding all other users.
:SYSTem:SHUTdown	Performs a remote shutdown or reboot of the mainframe.
:SYSTem:STATus?	Returns the contents of the system status register.
:SYSTem:TEMP?	Returns the approximate ambient air temperature at the inlet of the mainframe controller.
:SYSTem:TIMe?	Returns the system time.

:SUPer:EXIT

Description	Exits the PCT super application.	
Input	:SUPer:EXIT *<NAME>*	
Parameters	**Description**	**Value/Range of Values**
<NAME>	Name of super application in uppercase characters	PCT
Example	`:SUP:EXIT PCT`	
Busy?	—	
Error Messages	Standard error messages (see Error codes)	

:SUPer:LAUNch

Description	Starts the PCT super application.	
Input	:SUPer:LAUNch *<NAME>*	
Parameters	**Description**	**Value/Range of Values**
<NAME>	Name of super application in uppercase characters	PCT
Example	`:SUP:LAUN PCT`	
Busy?	—	
Error Messages	Standard error messages (see Error codes)	

:SUPer:STATus?

Description	Returns the status of the PCT super application.	
Input	:SYSTem:STATus? *<NAME>*	
Result	*<status>*	
Parameters	**Description**	**Value/Range of Values**
<NAME>	Name of super application in uppercase characters	PCT
<status>	Status of super application	• 0 = Application is not running • 1 = Application is running • 2 = Invalid name
Example	`:SUP:STAT? PCT` `Mon Feb 4 08:13:23 UTC 2013`	
Busy?	—	
Error Messages	Standard error messages (see Error codes)	

:SYSTem:DATe

Description	Sets the system date and time.
Input	:SYSTem:DATe *<date>*
Parameters	**Description**
<date>	Year, month, day in the format *yyyy*,*mm*,*dd*
Example	`:SYST:DAT 2023,06,28`
Busy?	—
Error Messages	Standard error messages (see Error codes)

:SYSTem:DATe?

Description	Returns the system date, time, and time.
Input	:SYSTem:DATe?
Result	*<date>*
Parameters	**Description**
<date>	Year, month, day in the format *yyyy*,*mm*,*dd*
Example	`:SYST:DAT?` `2023,06,28`
Busy?	—
Error Messages	Standard error messages (see Error codes)

:SYSTem:ERRor?

Description	Returns the first code written to the system error queue.	
Input	:SYSTem:ERRor?	
Response	*<message>*	
Parameter	**Description**	**Value/Range of Values**
code	Code and message	—

Examples	• `:SYST:ERR?`
	`-100, "Command error"`
	• `:SYST:ERR?`
	`0, "No Error"`	

Busy?	—	
Error Messages	Standard error messages (see Error codes)	

:SYSTem:FAULt:CHASsis?

Description	Returns the contents of the system fault register.	
Input	:SYSTem:FAULt:CHASsis?	
Result	*<integer>*	
Parameters	**Description**	**Value/Range of Values**
<integer>	A value that corresponds to the binary-weighted sum of all bits in the register	0 to 65535
Example	`:SYST:FAUL:CHAS?` `0`	
Busy?	—	
Error Messages	Standard error messages (see Error codes)	

System Fault Register							
Bit 7	**Bit 6**	**Bit 5**	**Bit 4**	**Bit 3**	**Bit 2**	**Bit 1**	**Bit 0**
Not Used	Not Used	Cassette Fault	Over Current	Fan Fault - Mainframe	Power Fault[1]	Over Temperature Alarm	Fan Fault - Controller

1. Power supply/rail failure

:SYSTem:FAULt:SUMMary?

Description	Returns a summary of all faults asserted by individual cassette slots (one bit for each slot in the mainframe). When there is a fault at a slot, the respective bit is set to 1 (TRUE).	
Input	:SYSTem:FAULt:SUMMary?	
Result	*<integer>*	
Parameters	**Description**	**Value/Range of Values**
<integer>	A value that corresponds to the binary-weighted sum of all bits in the register	0 (default) to 255
Example	`:SYST:FAUL:SUMM?` `2`	
Busy?	—	
Error Messages	Standard error messages (see Error codes)	

:SYSTem:GPIB

Description	Sets the address of the GPIB interface.	
Input	:SYSTem:GPIB *<integer>*	
Parameters	**Description**	**Value/Range of Values**
<integer>	GPIB interface address	0 to 30
Example	`:SYST:GPIB 13`	
Busy?	—	
Error Messages	Standard error messages (see Error codes)	

:SYSTem:GPIB?

Description	Returns the address of the GPIB interface.	
Input	:SYSTem:GPIB?	
Result	*<integer>*	
Parameters	**Description**	**Value/Range of Values**
<integer>	GPIB interface address	0 to 30
Example	`:SYST:GPIB?` `13`	
Busy?	—	
Error Messages	Standard error messages (see Error codes)	

:SYSTem:INFO?

Description	Returns hardware information for the mainframe and components present in the mainframe.
Input	SYSTem:INFO?
Result	*<pn>,<sn>,<hw>,<date>,<pnCMR>,<snCMR>,<hwCMR>,<dateCMR>, [<pnMod1>,<snMod1>,<dateMod1>][,<pnMod2>,<snMod2>,<dateMod2>]*
Parameters	**Description**
<pn>	Mainframe part number
<sn>	Mainframe serial number
<hw>	Mainframe hardware revision number
<date>	Mainframe manufacture date
<pnCMR>	Controller part number
<snCMR>	Controller serial number
<hwCMR>	Controller hardware revision number
<dateCMR>	Controller manufacture date
<pnMod>	Plug-in module part number
<snMod>	Plug-in module serial number
<dateMod>	Plug-in module date of manufacture
Example	`:SYST:INFO?` `MAP-380CH,3100021,002,20181109,MAP-300CLD-B,3100020,003,20181109,NA,NA,NA,NA,NA,NA,NA,NA`
Busy?	—
Error Messages	Standard error messages (see Error codes)

:SYSTem:INTLock

Description	Sets the state of the software interlock.	
Input	:SYSTem:INTLock *<integer>*	
Parameters	**Description**	**Value/Range of Values**
<integer>	Software interlock state	• 0 = Activated • 1 = Deactivated
Example	`:SYST:INTL 1`	
Busy?	—	
Error Messages	Standard error messages (see Error codes)	

:SYSTem:INTLock?

Description	Returns the state of the software interlock.	
Input	:SYSTem:INTLock?	
Result	*<integer>*	
Parameters	**Description**	**Value/Range of Values**
<integer>	Software interlock state	• 0 = Activated • 1 = Deactivated
Example	`:SYST:INTL?` `1`	
Busy?	—	
Error Messages	Standard error messages (see Error codes)	

:SYSTem:INTLock:STATe?

Description	Returns the system, software, and remote interlock states.	
Input	:SYSTem:INTLock:STATe?	
Result	*<systInterlock> <swInterlock> <remInterlock>*	
Parameters	**Description**	**Value/Range of Values**
<systInterlock>	System interlock state	• 0 = Activated • 1 = Deactivated
<swInterlock>	Software interlock state	
<remInterlock>	Remote interlock state	
Example	`:SYST:INTL:STAT?` `1,1,1`	
Busy?	—	
Error Messages	Standard error messages (see Error codes)	

:SYSTem:INVentory?

Description	Returns hardware and firmware information for each cassette present in the mainframe.
Input	:SYSTem:INVentory?
Result	*<slotID> <serialNumber> <partNumber>,[...,<slotID> <serialNumber> <partNumber>]*
Parameters	**Description**
<slot>	Slot number
<type>	Cassette type (See "Mnemonics" on page E-1)
serialNumber	• 0 • Cassette serial number
partNumber	• 0 • Cassette serial number
Example	`:SYST:INV?` `1 PCT 0 0,2 PCT 0 0,3 OSW IS2020CG mOSW-C111C008B1-M100-MFA,4 OSW IS17100M mOSW-C111C024B0-M100-MFA,5 SPN 0 0,6 TFX F92LC10468 mTFX-C111C008CM-M100-MFA,7 SPN 0 0,8 VOA 202842 mVOA-C1DSM-M100-MFA`
Busy?	—
Error Messages	Standard error messages (see Error codes)

:SYSTem:IP:LIST?

Description	Returns the IP addresses for the local and remote mainframes.
Input	:SYSTem:IP:LIST?
Result	*<ipAdress>*
Parameters	**Description**
<ipAdress>	IP address in the format xxx.xxx.xxx.xxx
Example	`:SYST:IP:LIST?` `10.14.140.32 LocalChas`
Busy?	—
Error Messages	Standard error messages (see Error codes)

:SYSTem:LAYout?

Description	Returns slot information for the mainframe.	
Input	:SYSTem:LAYout?	
Result	*<slotID> <mnemonic>...[,<slotID> <mnemonic>]*	
Parameters	**Description**	**Value/Range of Values**
<slotID>	Slot number	1 to 8
<mnemonic>	Slot description	See "Mnemonics" on page E-1.
Example	`:SYST:LAY?` `1 PCT,2 OPM,3 OSW,4 OSW,5 SPN,6 OSW,7 SPN,8 VOA`	
Busy?	—	
Error Messages	Standard error messages (see Error codes)	

:SYSTem:LAYout:PORT?

Description	Returns the TCP/IP port number for access to each cassette present in the mainframe.	
Input	:SYSTem:LAYout:PORT?	
Result	CMR MAP-300 8100,*<slotID> <application> <port>...[,<slot n> <application> <port* or 0*>]*	
Parameters	**Description**	**Value/Range of Values**
<slotID>	Slot number	1 to 8
<mnemonic>	Cassette application	See "Mnemonics" on page E-1.
<port or 0>	Port number or 0 (when UVL)	0 to 65535
Example	`:SYST:LAY:PORT?` `CMR MAP-300 8100,1 VOA 8201,2 EDFA 8202,3 PCX 8203,4 UVL 0,5 UVL 0,6 UVL 0,7 UVL 0,8 UVL 0`	
Busy?	—	
Error Messages	Standard error messages (see Error codes)	

:SYSTem:LEGAcy:MODE

Description	Sets the state of legacy MAP mode.	
Input	:SYST:LEGAcy:MODE <*integer*>	
Parameters	**Description**	**Value/Range of Values**
<*integer*>	State of legacy MAP mode	• 0 = Disable • 1 = Enable
Example	`:SYST:LEGA:MODE 1`	
Busy?	—	
Error Messages	Standard error messages (see Error codes)	

:SYSTem:LEGAcy:MODE?

Description	Returns the state of legacy MAP mode.	
Input	:SYST:LEGAcy:MODE?	
Result	*<integer>*	
Parameters	**Description**	**Value/Range of Values**
<integer>	State of legacy MAP mode	• 0 = Disabled • 1 = Enabled
Example	`:SYST:LEGA:MODE?` `0`	
Busy?	—	
Error Messages	Standard error messages (see Error codes)	

:SYSTem:LIC?

Description	Returns the software-license inventory.
Input	SYSTem:LIC?
Result	*<string>*
Parameters	**Description**
<string>	List of available software licenses or NONE
Example	`:SYST:LIC?` `MAP_TRIGGER,MAP_PCTCAS,MAP_PCTSEIL,MAP_PCTDB,MAP_PCTES,MAP_DUALSW,MAP_PCTCAL`
Busy?	—
Error Messages	Standard error messages (see Error codes)

:SYSTem:LOCK:RELEase

Description	Unlocks a locked cassette or system application, overriding all other users.	
Input	:SYSTem:LOCK:RELEase *<slotID>*	
Parameters	**Description**	**Value/Range of Values**
<slotID>	Slot number	1 to 8

Examples	• The following example releases a slot:
	`:SYST:LOCK:RELE 3`
	• The following example releases a system application:
	`:SYST:LOCK:RELE APP1`	

Busy?	—	
Error Messages	Standard error messages (see Error codes)	

:SYSTem:SHUTdown

Description	Performs a remote shutdown or reboot of the mainframe.	
Input	:SYSTem:SHUTdown *<integer>*	
Parameters	**Description**	**Value/Range of Values**
<integer>	Shut down or reboot	• 0 = Shutdown • 1 = Reboot
Example	`:SYST:SHUT 0`	
Busy?	—	
Error Messages	Standard error messages (see Error codes)	

:SYSTem:STATus?

Description	Returns the contents of the system status register (see Table 3-2).	
Input	:SYSTem:STATus?	
Result	*<integer>*	
Parameters	**Description**	**Value/Range of Values**
<integer>	A value that corresponds to the binary-weighted sum of all bits in the register	0 (default) to 255
Example	`:SYST:STAT?` `0`	
Busy?	—	
Error Messages	Standard error messages (see Error codes)	

Table 3-2: System status register

Bit	Description
0	Not Used
1	LAN Status
2	Duplicate IP Address
3	Interlock Enabled
4	Legacy Mode Enabled
5 - 7	Not Used

:SYSTem:TEMP?

Description	Returns the approximate ambient air temperature at the inlet of the mainframe controller.
Input	:SYSTem:TEMP?
Result	*<temperature>*
Parameters	**Description**
<temperature>	Mainframe temperature (Celsius)
Example	`:SYST:TEMP?` `24.730`
Busy?	—
Error Messages	Standard error messages (see Error codes)

:SYSTem:TIMe?

Description	Returns the system time.
Input	:SYSTem:TIMe?
Result	*<time>*
Parameters	**Description**
<time>	System time in hours, minutes, and seconds (*hh,mm,ss*)
Example	`SYST:TIM?` `01,14,26`
Busy?	—
Error Messages	Standard error messages (see Error codes)

System integration commands

System integration commands are used to set up a PCT configuration and to perform various integration/calibration measurements relevant to the various components in the system.

	To use the commands described in this section, establish a TCP/IP connection to the PCT module (see "Accessing the PCT Super Application command line interface" on page 1-1).

Table 4-1: Summary of PCT system integration commands

Command	Description
:FACTory:CALibration?	Returns the calibration status of the active PCT module.
:FACTory:CALibration:DATe?	Returns the calibration date/status of the active PCT module.
:FACTory:COMMit	Saves the measurements for the specified system integration/calibration step to the EEPROM.
:FACTory:CONFig:BIDir	Sets the bidirectional operation status of the PCT module.
:FACTory:CONFig:BIDir?	Returns the bidirectional operation status of the PCT module.
:FACTory:CONFig:CORE	Sets the fiber core size for a dual-core multimode PCT module.
:FACTory:CONFig:CORE?	Returns the fiber core size for a dual-core multimode PCT module.
:FACTory:CONFig:LPOW	Sets the status of the low-power option on a multimode PCT module.
:FACTory:CONFig:LPOW?	Returns the status of the low-power option on a multimode PCT module.
:FACTory:CONFig:OPM	Sets the status/location of a remote OPM cassette.
:FACTory:CONFig:OPM?	Returns the status/location of a remote OPM cassette.
:FACTory:CONFig:SWITch	Sets the status/location of a switch cassette.
:FACTory:CONFig:SWITch?	Returns the status/location of a switch cassette.
:FACTory:CONFig:SWITch:SIZe	Sets the channel count for an external MAP Series switch.
:FACTory:MEASure:FPDistance?	Returns front-panel distance measurements at each wavelength for the specified internal launch fiber (ILF).

Table 4-1: Summary of PCT system integration commands (continued)

Command	Description
:FACTory:MEASure:FPLoss?	Returns front-panel insertion loss measurements at each wavelength for the specified internal launch fiber (ILF).
:FACTory:MEASure:FPRatio?	Returns front-panel power ratio measurements at each wavelength for the specified internal launch fiber (ILF).
:FACTory:MEASure:LOOP?	Returns the loopback length and insertion loss at each wavelength for the specified internal launch fiber (ILF).
:FACTory:MEASure:OPMP?	Returns the Remote OPM Pairing power offsets at each wavelength for the specified OPM detector.
:FACTory:MEASure:RANGe?	Returns the Remote Range insertion loss offsets at each wavelength for the specified internal launch fiber.
:FACTory:MEASure:STARt	Starts a measurement for the specified system integration/calibration step or all steps.
:FACTory:MEASure:SWDistance?	Returns distance measurements at each wavelength for the specified switch channel.
:FACTory:MEASure:SWLoss?	Returns insertion loss measurements at each wavelength for the specified switch channel.
:FACTory:SETup:SWITch	Sets the active switch for system integration/calibration.
:FACTory:SETup:SWITch?	Returns the active switch for system integration/calibration.
:FACTory:RESet	Resets the measurements for either the specified system integration/calibration step or all steps to factory defaults.

:FACTory:CALibration?

Description	Returns the calibration status of the active PCT module.	
Input	:FACTory:CALibration?	
Result	*<status>*	
Parameters	**Description**	**Value/Range of Values**
<status>	Calibration status	• YES = Module calibrated • NO = Module not calibrated
Example	`:FACT:CAL?` `YES`	
Busy?	—	

Error Messages	• Standard error codes (see Error codes) and warning codes (see Warning codes)
	• Command-specific error codes:
	  • -204, Invalid while cassette is not selected
	  • -205, Command not valid in current state
	  • -228, Invalid parameter value for current configuration	

:FACTory:CALibration:DATe?

Description	Returns the calibration date/status of the active PCT module.	
Input	:FACTory:CALibration:DATe?	
Result	*<status>*	
Parameters	**Description**	**Value/Range of Values**
<status>	Calibration date or status	• *yyyy.mm.dd* = Date calibration performed. • NO = Not calibrated.

Examples	• `:FACT:CAL:DAT?`
	`2020.11.30`
	
	• `:FACT:CAL:DAT?`
	`NO`	

Busy?	—	

Error Messages	• Standard error codes (see Error codes) and warning codes (see Warning codes)
	• Command-specific error codes:
	  • -204, Invalid while cassette is not selected
	  • -205, Command not valid in current state
	  • -228, Invalid parameter for current configuration	

:FACTory:COMMit

Description	Saves the measurements for the specified system integration/calibration step to the EEPROM.	
Input	:FACTory:COMMit <*step*>	
Parameters	**Description**	**Value/Range of Values**
<*step*>	Integration/calibration step	• 1 = Front panel distances • 2 = Front panel IL/Ratio • 3 = Artifact loss and ORL • 4 = Artifact connector losses • 5 = Artifact K and Delta T coefficients • 6 = 1xN switch distances • 7 = 1xN switch connector losses • 8 = Loopback IL/length • 9 = Remote OPM pairing • 10 = Range IL offsets **Note:** The value 4 cannot be committed and will produce the error code -224, Illegal parameter value.
Examples	• `:FACT:COMM 2`	
Busy?	—	

Error Messages	• Standard error codes (see Error codes) and warning codes (see Warning codes)
	• Command-specific error codes:
	  • -204, Invalid while cassette is not selected
	  • -205, Command not valid in current state
	  • -224, Illegal parameter value
	  • -228, Invalid parameter for current configuration	

:FACTory:CONFig:BIDir

Description	Sets the bidirectional operation status of the PCT module.	
Input	:FACTory:CONFig:BIDir <*status*>	
Parameters	**Description**	**Value/Range of Values**
<*status*>	Status of bidirectional operation	• 0 = Disable • 1 = Enable
Example	`:FACT:CONF:BID 1`	
Busy?	—	

Error Messages	• Standard error codes (see Error codes) and warning codes (see Warning codes)
	• Command-specific error codes:
	  • -224, Illegal parameter value
	  • -228, Invalid parameter value for current configuration	

:FACTory:CONFig:BIDir?

Description	Returns the bidirectional operation status of the PCT module.	
Input	:FACTory:CONFig:BIDir?	
Result	*<status>*	
Parameters	**Description**	**Value/Range of Values**
<status>	Status of bidirectional operation	• 0 = Disabled • 1 = Enabled
Example	`:FACT:CONF:BID?` `0`	
Busy?	—	
Error Messages	• Standard error codes (see Error codes) and warning codes (see Warning codes) • Command-specific error code: • -224, Illegal parameter value	

:FACTory:CONFig:CORE

Description	Sets the fiber core size for a dual-core multimode PCT module.	
Input	:FACTory:CONFig:CORE *<core>*	
Parameters	**Description**	**Value/Range of Values**
<core>	Core size	• 0 = 50 µm • 1 = 62.5 µm
Example	`:FACT:CONF:CORE 1`	
Busy?	—	

Error Messages	• Standard error codes (see Error codes) and warning codes (see Warning codes)
	• Command-specific error codes:
	  • -224, Illegal parameter value
	  • -228, Invalid parameter value for current configuration	

:FACTory:CONFig:CORE?

Description	Returns the fiber core size for a dual-core multimode PCT module.	
Input	:FACTory:CONFig:CORE	
Result	*<core>*	
Parameters	**Description**	**Value/Range of Values**
<core>	Core size	• 0 = 50 µm • 1 = 62.5 µm
Example	`:FACT:CONF:CORE?` `0`	
Busy?	—	
Error Messages	• Standard error codes (see Error codes) and warning codes (see Warning codes) • Command-specific error code: • -224, Illegal parameter value	

:FACTory:CONFig:LPOW

Description	Sets the status of the low-power option on a multimode PCT module.	
Input	FACTory:CONFig:LPOW <*status*>	
Parameters	**Description**	**Value/Range of Values**
<*status*>	Status of option	• 0 = Disable • 1 = Enable
Example	`:FACT:CONF:LPOW 1`	
Busy?	—	

Error Messages	• Standard error codes (see Error codes) and warning codes (see Warning codes)
	• Command-specific error codes:
	  • -224, Illegal parameter value
	  • -228, Invalid parameter value for current configuration	

:FACTory:CONFig:LPOW?

Description	Returns the status of the low-power option on a multimode PCT module.	
Input	FACTory:CONFig:LPOW	
Result	<*status*>	
Parameters	**Description**	**Value/Range of Values**
<*status*>	Status of option	• 0 = Disabled • 1 = Enabled
Example	`:FACT:CONF:LPOW?` `1`	
Busy?	—	
Error Messages	• Standard error codes (see Error codes) and warning codes (see Warning codes) • Command-specific error code: • -224, Illegal parameter value	

:FACTory:CONFig:OPM

Description	Sets the status/location of a remote OPM cassette.	
Input	:FACTory:CONFig:OPM <*status*>	
Parameters	**Description**	**Value/Range of Values**
<*status*>	Status/location of remote OPM cassette	• NONE = Disabled • MAP<*C*>.<*S*>.<*D*> where • *C* = Mainframe number • *S* = Slot number • *D* = Device number, which is always ignored and can be entered as `x`.
Example	`:FACT:CONF:OPM MAP0.2.x`	
Busy?	—	
Error Messages	• Standard error codes (see Error codes) and warning codes (see Warning codes) • Command-specific error code: • -224, Illegal parameter value	

:FACTory:CONFig:OPM?

Description	Returns the status/location of a remote OPM cassette.	
Input	:FACTory:CONFig:OPM?	
Result	*<status>*	
Parameters	**Description**	**Value/Range of Values**
<status>	Status/location of OPM cassette	• NONE = Disabled • MAP<*C*>.<*S*>.<*D*> where • *C* = Mainframe number • *S* = Slot number • *D* = Device number, which is always returned as `x`.
Example	`:FACT:CONFIG:OPM?` `NONE`	
Busy?	—	
Error Messages	• Standard error codes (see Error codes) and warning codes (see Warning codes) • Command-specific error code: • -224, Illegal parameter value	

:FACTory:CONFig:SWITch

Description	Sets the status/location of a switch cassette.	
Input	:FACTory:CONFig:SWITch <*switch*>,<*status*>	
Parameters	**Description**	**Value/Range of Values**
<*switch*>	Switch number	• 1 = Switch 1 (SW1) • 2 = Switch 2 (SW2)
<*status*>	Switch status/location	• NONE = Disabled • MAP<*C*>.<*S*>.<*D*> where • *C* = Mainframe number • *S* = Slot number • *D* = Device number • USB*n* = External VIAVI SB/SC Series switch, where *n* = 0 to 3
Example	`:FACT:CONF:SWIT 1,MAP0.2.1`	
Busy?	—	
Error Messages	• Standard error codes (see Error codes) and warning codes (see Warning codes) • Command-specific error code: • -224, Illegal parameter value	

:FACTory:CONFig:SWITch?

Description	Returns the status/location of a switch cassette.	
Input	:FACTory:CONFig:SWITch? <*switch*>	
Result	<*status*>	
Parameters	**Description**	**Value/Range of Values**
<*switch*>	Switch number	• 1 = Switch 1 (SW1) • 2 = Switch 2 (SW2)

<*status*>	Switch status/location	• NONE = Disabled
		• MAP<*C*>.<*S*>.<*D*>
		where
		  • *C* = Mainframe number
		  • *S* = Slot number
		  • *D* = Device number
		• USB*n* = External VIAVI SB/C Series switch, where *n* = 0 to 3

Example	`:FACT:CONF:SWIT? 1` `NONE`	
Busy?	—	
Error Messages	• Standard error codes (see Error codes) and warning codes (see Warning codes) • Command-specific error code: • -224, Illegal parameter value	

:FACTory:CONFig:SWITch:SIZe

Description	Sets the channel count for an external MAP Series switch.	
Input	:FACTory:CONFig:SWITch:SIZE <*switch*>,<*size*>	
Parameters	**Description**	**Value/Range of Values**
<*switch*>	Switch number	• 1 = Switch 1 (SW1) • 2 = Switch 2 (SW2)
<*size*>	Switch size	2 to 256
Example	`:FACT:CONF:SWIT:SIZE 2,12`	
Busy?	—	

Error Messages	• Standard error codes (see Error codes) and warning codes (see Warning codes)
	• Command-specific error codes:
	  • -224, Illegal parameter value
	  • -228, Invalid parameter value for current configuration	

:FACTory:MEASure:FPDistance?

Description	Returns front-panel distance measurements at each wavelength for the specified internal launch fiber (ILF).	
Input	:FACTory:MEASure:FPDistance? *<ILF>*	
Result	*<wavelength>*,*<defaultDistance>*,*<currentDistance>*,*<measuredDistance>* [,…,*<wavelength>*,*<defaultDistance>*,*<currentDistance>*,*<measuredDistance>*]	
Parameters	**Description**	**Value/Range of Values**
<ILF>	Internal launch fiber	• 1 • 2
<wavelength>	Wavelength (nm)	—
<defaultDistance>	Default front-panel distance	—
<currentDistance>	Current front-panel distance	—
<measuredDistance>	Measured front-panel distance	—

Example	`:FACT:MEAS:FPD? 1`
	`1310,0.00,0.28,0.28,1490,0.00,0.24,0.24,1550,0.00,0.20,0.20,`
	`1625,0.00,0.32,0.32`	

Busy?	—	

Error Messages	• Standard error codes (see Error codes) and warning codes (see Warning codes)
	• Command-specific error codes:
	  • -204, Invalid while cassette is not selected
	  • -205, Command not valid in current state
	  • -224, Illegal parameter value
	  • -228, Invalid parameter for current configuration	

:FACTory:MEASure:FPLoss?

Description	Returns front-panel insertion loss measurements at each wavelength for the specified internal launch fiber (ILF).	
Input	:FACTory:MEASure:FPLoss? *<ILF>*	
Result	*<wavelength>*,*<referenceIL>*,*<currentIL>*,*<measuredIL>*[,...,*<wavelength>*, *<referenceIL>*,*<currentIL>*,*<measuredIL>*]	
Parameters	**Description**	**Value/Range of Values**
<ILF>	Internal launch fiber	• 1 • 2
<wavelength>	Wavelength (nm)	—
<referenceIL>	Reference front-panel insertion loss	—
<currentIL>	Current front-panel insertion loss	—
<measuredIL>	Measured front-panel insertion loss	—
Example	`:FACT:MEAS:FPL? 1` `1310,-999.000,0.040,0.040,1490,-999.000,0.050,0.050,1550,-999.000,0.050,0.050,1625,-999.000,0.050,0.050`	
Busy?	—	

Error Messages	• Standard error codes (see Error codes) and warning codes (see Warning codes)
	• Command-specific error codes:
	  • -204, Invalid while cassette is not selected
	  • -205, Command not valid in current state
	  • -224, Illegal parameter value
	  • -228, Invalid parameter for current configuration	

:FACTory:MEASure:FPRatio?

Description	Returns front-panel power ratio measurements at each wavelength for the specified internal launch fiber (ILF).	
Input	:FACTory:MEASure:FPLoss? <ILF>	
Result	*<wavelength>,<currentFPPR>,<measuredFPPR>*[,...,*<wavelength>*, *<referenceFPPR>,<currentFPPR>,<measuredFPPR>*	
Parameters	**Description**	**Value/Range of Values**
<ILF>	Internal launch fiber	• 1 • 2
<wavelength>	Wavelength (nm)	—
<currentFPPR>	Current front-panel power ratio	—
<measuredFPPR>	Measured front-panel power ratio	—
Example	`:FACT:MEAS:FPR? 1` `1310,6.134,6.134,1490,6.848,6.848,1550,6.472,6.472,1625,5.735,5.735`	
Busy?	—	

Error Messages	• Standard error codes (see Error codes) and warning codes (see Warning codes)
	• Command-specific error codes:
	  • -204, Invalid while cassette is not selected
	  • -205, Command not valid in current state
	  • -224, Illegal parameter value
	  • -228, Invalid parameter for current configuration	

:FACTory:MEASure:LOOP?

Description	Returns the loopback length and insertion loss at each wavelength for the specified internal launch fiber (ILF).	
Input	:FACTory:MEASure:FPRatio? <*ILF*>	
Result	<*wavelength*>,<*currentLength*>,<*measuredLength*>,<*currentIL*>,<*measuredIL*> [,...,<*wavelength*>,<*currentLength*>,<*measuredLength*>,<*currentIL*>, <*measuredIL*>]	
Parameters	**Description**	**Value/Range of Values**
<*ILF*>	Internal launch fiber	• 1 • 2
<*wavelength*>	Wavelength (nm)	—
<*currentLength*>	Current loopback length	—
<*measuredLength*>	Measured loopback length	—
<*currentIL*>	Current insertion loss	—
<*measuredIL*>	Measured insertion loss	—

Example	`:FACT:MEAS:LOOP? 1`
	`1310,0.00,0.00,0.000,0.000,1490,0.00,0.00,0.000,0.000,1550,`
	`0.00,0.00,0.000,0.000,1625,0.00,0.00,0.000,0.000`	

Busy?	—	

Error Messages	• Standard error codes (see Error codes) and warning codes (see Warning codes)
	• Command-specific error codes:
	  • -204, Invalid while cassette is not selected
	  • -205, Command not valid in current state
	  • -224, Illegal parameter value
	  • -228, Invalid parameter value for current configuration	

:FACTory:MEASure:OPMP?

Description	Returns the Remote OPM Pairing power offsets at each wavelength for the specified OPM detector.	
Input	:FACTory:MEASure:OPMP? *<index>*	
Result	*<wavelength>*,*<referenceOffset>*,*<currentOffset>*,*<measuredOffset>* [,...,*<wavelength>*,*<referenceOffset>*,*<currentOffset>*,*<measuredOffset>*]	
Parameters	**Description**	**Value/Range of Values**
<index>	Remote OPM head index number	• 0 = PCT OPM • 1 to 4 = Remote OPM detector
<wavelength>	Wavelength (nm)	—
<referenceOffset>	Reference power offset	—
<currentOffset>	Current power offset	—
<measuredOffset>	Measured power offset	—
Example	`:FACT:MEAS:OPMP? 1` `1310,-15.19,0.08,0.04,1550,-17.23,0.15,0.08`	
Busy?	—	

Error Messages	• Standard error codes (see Error codes) and warning codes (see Warning codes)
	• Command-specific error codes:
	  • -204, Invalid while cassette is not selected
	  • -205, Command not valid in current state
	  • -224, Illegal parameter value
	  • -228, Invalid parameter value for current configuration	

:FACTory:MEASure:RANGe?

Description	Returns the Remote Range insertion loss offsets at each wavelength for the specified internal launch fiber.	
Input	:FACTory:MEASure:RANGe? <*fiber*>	
Result	<*wavelength*>,<*range*>,...<*range*>[,...,<*wavelength*>,<*range*>,...<*range*>]	
Parameters	**Description**	**Value/Range of Values**
<*fiber*>	Internal launch fiber	1 to 2
<*wavelength*>	Wavelength (nm)	—
<*range*>	Remote range (m)	—
Example	`:FACT:MEAS:RANG? 1` `1310,0.02,0.03,0.05,0.07,0.13,1550,0.01,0.02`	
Busy?	—	

Error Messages	• Standard error codes (see Error codes) and warning codes (see Warning codes)
	• Command-specific error codes:
	  • -204, Invalid while cassette is not selected
	  • -205, Command not valid in current state
	  • -224, Illegal parameter value
	  • -228, Invalid parameter value for current configuration	

:FACTory:MEASure:STARt

Description	Starts a measurement for the specified system integration/calibration step or all steps.	
Input	:FACTory:MEASure:STARt [<*step*>]	
Parameters	**Description**	**Value/Range of Values**
<*step*>	Integration/calibration step (optional) **Note:** When the <*step*> parameter is omitted, measurements for all steps are started.	• 1 = Front panel distances • 2 = Front panel IL/Ratio • 6 = Switch distances • 7 = Switch connector losses • 8 = Loopback IL/length • 9 = Remote OPM pairing **Note:** The values 3, 4, and 5 are not used.
Example	`:FACT:MEAS:STAR 2`	
Busy?	—	

Error Messages	• Standard error codes (see Error codes) and warning codes (see Warning codes)
	• Command-specific error codes:
	  • -204, Invalid while cassette is not selected
	  • -205, Command not valid in current state
	  • -224, Illegal parameter value
	  • -228, Invalid parameter value for current configuration	

:FACTory:MEASure:SWDistance?

Description	Returns distance measurements at each wavelength for the specified switch channel. **Note:** Switch must be set up and its location configured (see :FACTory:SETup:SWITch).	
Input	:FACTory:MEASure:SWDistance? *<channel>*,*<switch>*	
Result	*<wavelength>*,*<defaultDistance>*,*<currentDistance>*,*<measuredDistance>*[,..., *<wavelength>*,*<defaultDistance>*,*<currentDistance>*,*<measuredDistance>*]	
Parameters	**Description**	**Value/Range of Values**
<channel>	Switch channel	1 to *n*
<switch>	Switch number	• 1 = Switch 1 (SW1) • 2 = Switch 2 (SW2)
<wavelength>	Wavelength (nm)	—
<defaultDistance>	Default switch distance	—
<currentDistance>	Current switch distance	—
<measuredDistance>	Measured switch distance	—
Example	`:FACT:MEAS:SWD? 2,1` `1310,0.0,3.4,3.4,1550,0.0,3.44,3.4`	
Busy?	—	

Error Messages	• Standard error codes (see Error codes) and warning codes (see Warning codes)
	• Command-specific error codes:
	  • -204, Invalid while cassette is not selected
	  • -205, Command not valid in current state
	  • -224, Illegal parameter value
	  • -228, Invalid parameter value for current configuration	

:FACTory:MEASure:SWLoss?

Description	Returns insertion loss measurements at each wavelength for the specified switch channel. **Note:** Switch must be set up and its location configured (see :FACTory:SETup:SWITch).	
Input	:FACTory:MEASure:SWLoss? <*channel*>,<*switch*>	
Result	<*list*>	
Parameters	**Description**	**Value/Range of Values**
<*channel*>	Switch channel number	1 to *n*
<*switch*>	Switch number	• 1 = Switch 1 (SW1) • 2 = Switch 2 (SW2)
<*wavelength*>	Wavelength (nm)	—
<*referenceIL*>	Reference switch insertion loss	—
<*currentIL*>	Current switch insertion loss	—
<*measuredIL*>	Measured switch insertion loss	—
Example	`:FACT:MEAS:SWL? 2,1` `1310,-15.19,2.52,2.64,1550,-17.23,1.75,1.76`	
Busy?	—	

Error Messages	• Standard error codes (see Error codes) and warning codes (see Warning codes)
	• Command-specific error codes:
	  • -204, Invalid while cassette is not selected
	  • -205, Command not valid in current state
	  • -224, Illegal parameter value
	  • -228, Invalid parameter value for current configuration	

:FACTory:SETup:SWITch

Description	Sets the active switch for system integration/calibration.	
Input	:FACTory:SETup:SWITch <*switch*>	
Parameters	**Description**	**Value/Range of Values**
<*switch*>	Switch number	• 1 = Switch 1 (SW1) • 2 = Switch 2 (SW2)
Example	`:FACT:SET:SWIT 1`	
Busy?	—	

Error Messages	• Standard error codes (see Error codes) and warning codes (see Warning codes)
	• Command-specific error codes:
	  • -204, Invalid while cassette is not selected
	  • -205, Command not valid in current state
	  • -224, Illegal parameter value
	  • -228, Invalid parameter value for current configuration	

:FACTory:SETup:SWITch?

Description	Returns the active switch for system integration/calibration.	
Input	:FACTory:SETup:SWITch?	
Result	*<switch>*	
Parameters	**Description**	**Value/Range of Values**
<switch>	Switch number	• 1 = Switch 1 (SW1) • 2 = Switch 2 (SW2)
Example	`:FACT:SET:SWIT?` `1`	
Busy?	—	

Error Messages	• Standard error codes (see Error codes) and warning codes (see Warning codes)
	• Command-specific error codes:
	  • -204, Invalid while cassette is not selected
	  • -205, Command not valid in current state	

+

:FACTory:RESet

Description	Resets the measurements for either the specified system integration/calibration step or all steps to factory defaults.	
Input	:FACTory:RESet [<*step*>]	
Parameters	**Description**	**Value/Range of Values**
<*step*>	Integration/calibration step (optional) **Note:** When the <*step*> parameter is omitted, the measurements for all steps are reset to factory default values.	• 1 = Front panel distances • 2 = Front panel IL/Ratio • 6 = Switch distances • 7 = Switch connector losses • 8 = Loopback IL/length • 9 = Remote OPM pairing **Note:** The values 3, 4, and 5 are not used.
Examples	• `:FACT:RES` • `:FACT:RES 2`	
Busy?	—	

Error Messages	• Standard error codes (see Error codes) and warning codes (see Warning codes)
	• Command-specific error codes:
	  • -204, Invalid while cassette is not selected
	  • -205, Command not valid in current state
	  • -224, Illegal parameter value
	  • -228, Invalid parameter value for current configuration	

PCT commands

PCT commands include commands to configure and perform measurements, commands that return values for the last successful measurements, and commands for managing port mapping.

	To use the commands described in this section, establish a TCP/IP connection to the PCT module (see "Accessing the PCT Super Application command line interface" on page 1-1).

Table 5-1: Summary of PCT commands

Command	Description
*ACTive?	Returns the status of a PCT module.
*REM	Sets the PCT module to accept remote commands from the current connection.
:MEASure:ALL?	Returns all measurement values for the measurement mode.
:MEASure:DISTance?	Returns the distance to the end of fiber at the PCT module for the measurement mode.
:MEASure:FASTil	Starts a Fast IL measurement.
:MEASure:FASTil?	Returns the results of the last successful Fast IL measurement.
:MEASure:HELix	Sets the Helix Factor value.
:MEASure:HELix?	Returns the Helix Factor value.
:MEASure:IL?	Returns either the insertion loss (DUT or reference) for the measurement mode.
:MEASure:ILLA	Enables the option to adjust insertion loss based on length.
:MEASure:ILLA?	Returns the status of the option to adjust insertion loss based on length.
:MEASure:LENGth?	Returns a length value for either the DUT or one or more MTJs.
:MEASure:ORL?	Returns the DUT ORL defined by the specified ORL zone for the measurement setup.
:MEASure:ORL:PRESet?	Returns the DUT ORL preset at the specified origin for the measurement setup.
:MEASure:ORL:SETup	Sets up an ORL zone.
:MEASure:ORL:SETup?	Returns setup information for an ORL zone.

Table 5-1: Summary of PCT commands (continued)

Command	Description
:MEASure:ORL:ZONe?	Returns the DUT ORL measurement at the specified RL zone.
:MEASure:POWer?	Returns the power measurement for the measurement setup.
:MEASure:REF2step	Sets the state of the bidirectional two-step referencing option.
:MEASure:REF2step?	Returns the state of the bidirectional two-step referencing option.
:MEASure:REFAlt	Sets the state of the alternate-input master test jumper (MTJ) referencing option.
:MEASure:REFAlt?	Sets the state of the alternate-input MTJ referencing option.
:MEASure:RESet	Clears all reference and DUT measurements, and resets override setting.
:MEASure:SEIL	Starts a single-ended IL (SEIL) measurement.
:MEASure:SEIL?	Returns the results of the last successful SEIL measurement.
:MEASure:STARt	Starts a measurement cycle.
:MEASure:STATe?	Returns the operational state of the PCT application.
:MEASure:STOP	Stops the current measurement cycle, or turns off the pulsed laser if it is enabled.
:PATH:BIDIR	Sets the state of the Dual MTJ Bidirectional Measurement option.
:PATH:BIDIR?	Return the state of the Dual MTJ Bidirectional Measurement option.
:PATH:CHANnel	Sets the channel to use for a channel group.
:PATH:CHANnel?	Returns the channel in use for a channel group.
:PATH:CHANnel:AVAilable?	Returns the number of available channels for a channel group.
:PATH:CONNection	Sets the MTJ connection mode.
:PATH:CONNection?	Returns the MTJ connection mode.
:PATH:DUT:LENGth	Sets the DUT length-estimation value.
:PATH:DUT:LENGth?	Returns the DUT length-estimation value.
:PATH:DUT:LENGth:AUTO	Sets the status of the DUT length-estimation option.
:PATH:DUT:LENGth:AUTO?	Returns the status of the DUT length-estimation option.
:PATH:EOF:MIN	Sets the value of the minimum end of fiber (EOF) distance.
:PATH:EOF:MIN?	Returns the value of the minimum end of fiber (EOF) distance.
:PATH:JUMPer:IL	Sets the IL override value for an MTJ.
:PATH:JUMPer:IL?	Returns the IL override value for an MTJ.
:PATH:JUMPer:IL:AUTO	Sets the state of the insertion loss (IL) override option for an MTJ.
:PATH:JUMPer:IL:AUTO?	Returns the state of the insertion loss (IL) override option for an MTJ.
:PATH:JUMPer:LENGth	Sets the length-override value for an MTJ.

Table 5-1: Summary of PCT commands (continued)

Command	Description
:PATH:JUMPer:LENGth?	Returns the length-override value for an MTJ.
:PATH:JUMPer:LENGth:AUTO	Sets the state of the insertion loss (IL) override option for an MTJ.
:PATH:JUMPer:LENGth:AUTO?	Returns the state of the insertion loss (IL) override option for an MTJ.
:PATH:JUMPer:RESet	Resets one or all MTJs to default settings.
:PATH:JUMPer:RESet:MEASure	Clears IL/length values measured with one or all MTJs.
:PATH:LAUNch	Sets the source launch port for a PCT module with two outputs.
:PATH:LAUNch?	Returns the source launch port for a PCT module with two outputs.
:PATH:LAUNch:AVAilable?	Returns the number of available source launch ports for a PCT module with two outputs.
:PATH:LIST	Sets each switch channel to use for measurements.
:PATH:LIST?	Returns each switch channels used for measurements.
:PATH:RECeive	Sets the state of the receive jumper.
:PATH:RECeive?	Returns the state of the receive jumper.
:PMAP:ENABle	Sets the state of the Port Map channel selection option.
:PMAP:ENABle?	Returns the state of the Port Map channel selection option.
:PMAP:MEASure:ALL	Determines the port links for all unassigned paths in a variable Port Map table.
:PMAP:MEASure:LIVE	Sets the channel-link path for a live-variable channel in a variable Port Map table.
:PMAP:MEASure:LIVE?	Returns the channel-link path for a live-variable channel in a variable Port Map table.
:PMAP:MEASure:VALid	Performs a Port Map validation measurement for all channel-link paths in the Port Map table.
:PMAP:MEASure:VALid?	Returns the results of a Port Map validation measurement.
:PMAP:PATH:LINK?	Returns the channel-link for a given Port Map path.
:PMAP:PATH:SELect	Selects a channel-link path in the Port Map table.
:PMAP:PATH:SELect?	Returns the selected channel-link path in the Port Map table.
:PMAP:PATH:SIZE?	Returns the number of available Port Map paths.
:PMAP:SETup:FIRSt?	Returns the first defined channel for a switch.
:PMAP:SETup:INIT:LIST	Initializes the Port Map table when channel lists are used.
:PMAP:SETup:INIT:RANGe	Initializes the Port Map table when channel ranges are used.
:PMAP:SETup:LAST?	Returns the last defined channel for a switch.
:PMAP:SETup:LINK	Sets the channel-link paths in the Port Map table for a switch.

Table 5-1: Summary of PCT commands (continued)

Command	Description
:PMAP:SETup:LIST?	Returns the channel-link paths in the Port Map table for a switch.
:PMAP:SETup:LOCK	**Locks the variable Port Map table.**
:PMAP:SETup:LOCK?	Returns the lock state of the variable Port Map table.
:PMAP:SETup:MODE?	Returns the Port Map table mode.
:PMAP:SETup:RESet	Resets all variable channel assignments in the Port Map table.
:PMAP:SETup:SIZE?	Returns the number of rows (Port Map paths) in the Port Map table.
:SENSe:ATIMe	Sets the measurement averaging time to use for measurements.
:SENSe:ATIMe?	Returns the measurement averaging time used for measurements.
:SENSe:ATIMe:AVAilable?	Returns the available measurement averaging times.
:SENSe:FUNCtion	Sets the PCT measurement mode.
:SENSe:FUNCtion?	Returns the PCT measurement mode in use.
:SENSe:ILONly	Sets the state of the IL-only DUT measurement option.
:SENSe:ILONly?	Returns the state of the IL-only DUT measurement option.
:SENSe:OPM	Sets the OPM detector to use for IL measurements.
:SENSe:OPM?	Returns the OPM detector to use for IL measurements.
:SENSe:RANGe	Sets the DUT measurement range.
:SENSe:RANGe?	Returns the DUT measurement range.
:SENSe:TEMPerature	Sets the temperature-sensitivity level.
:SENSe:TEMPerature?	Returns the temperature-sensitivity level.
:SOURce:CONTinuous	Sets the state of the continuous-scanning mode option.
:SOURce:CONTinuous?	Returns the state of the continuous-scanning mode option.
:SOURce:LIST	Sets one or more source wavelengths to use for measurements.
:SOURce:LIST?	Returns one or more source wavelengths to use for measurements.
:SOURce:WARMup	Sets the status of the option to warm up a source wavelength for upcoming measurements.
:SOURce:WARMup?	Returns the status of the option to warm up a source wavelength for upcoming measurements.
:SOURce:WAVelength	Sets a single source wavelength to use for measurements.
:SOURce:WAVelength?	Returns the source wavelength used for measurements.
:SOURce:WAVelength:AVAilable?	Returns the source wavelengths available on the PCT module.
:SYSTem:WARNing?	Returns the first error code written to the cassette warning queue.

Table 5-1: Summary of PCT commands (continued)

Command	Description
OPM commands	
:FETCh:LOSS?	Returns the insertion loss (IL) value for the current measurement setup.
:FETCh:ORL?	Returns the optical return loss (ORL) value.
:FETCh:POWer?	Returns the optical power value.
:SENSe:POWer:DARK	Starts a dark power measurement for each available power range.
:SENSe:POWer:DARK?	Returns status information about the dark measurement value.
:SENSe:POWer:DARK:FACTory	Restores the factory-set dark measurement value.
:SENSe:POWer:MODE	Sets the status of the Live mode option.
:SENSe:POWer:MODE?	Returns the status of the Live mode option.

*ACTive?

Description	Returns the status of a PCT module. **Note:** A system can include up to three PCT modules, with only one module active at a time.	
Input	*ACTive?	
Result	<*status*>	
Parameters	**Description**	**Value/Range of Values**
<*status*>	Status of the PCT module	• 0 = Inactive • 1 = Active
Example	`*ACT?` `1`	
Busy?	—	
Error Messages	Standard error codes (see Error codes) and warning codes (see Warning codes)	

*REM

Description	Sets the PCT module to accept remote commands from the current connection. **Note:** A system can include up to three PCT modules, with only one module active at a time.
Input	*REM
Example	`*REM`
Busy?	—
Error Messages	• Standard error codes (see Error codes) and warning codes (see Warning codes) • Command-specific error code: • -206, Command not valid during measurement

:MEASure:ALL?

Description	Returns all measurement values for the current measurement mode. **Note:** Use :SENSe:FUNCtion? to retrieve the current PCT measurement mode.	
Input	:MEASure:ALL? <*launchChannel*>[,<*receiveChannel*>]	
Result	<*wavelength*>,<*list*>[,...,<*wavelength*>,<*measurements*>]	
Parameters	**Description**	**Value/Range of Values**
<*launchChannel*>	Channel on the launch side	1 to *n*
<*receiveChannel*>	Channel on the receive side **Note:** Include this parameter when the measurement setup uses Dual MTJ connection mode. Use :PATH:CONNection? to retrieve the current connection mode.	1 to *n*
<*wavelength*>	Wavelength (nm)	See :SOURce:WAVelength:AVAilable?

<*measurement*>	Available measurements for each wavelength	• In Reference mode:
		  • Power (dBm)
		  • IL Offset (dB)
		  • Length (m)
		• In DUT mode:
		  • IL (dB)
		  • Length (m)
		  • ORL1 (dB)
		  • ORL2 (dB)

Examples	• `:MEAS:ALL? 1,1`
	`1625,1.266,-5.79,0.27`
	• `:MEAS:ALL? 1,1`
	`1625,,,`	

Busy?	—	

Error Messages	• Standard error codes (see Error codes) and warning codes (see Warning codes)
	• Command-specific error codes:
	  • -204, Invalid while cassette is not selected
	  • -205, Command not valid in current state
	  • -228, Invalid parameter value for current configuration	

:MEASure:DISTance?

Description	Returns the distance to the end of fiber for the current measurement mode. **Note:** Use :SENSe:FUNCtion? to retrieve the current PCT measurement mode.	
Input	:MEASure:DISTance?	
Result	*<distance>*	
Parameters	**Description**	**Value/Range of Values**
<distance>	Distance to end of fiber (m)	—
Example	`:MEAS:DIST?` `5.00`	
Busy?	—	

Error Messages	• Standard error codes (see Error codes) and warning codes (see Warning codes)
	• Command-specific error codes:
	  • -204, Invalid while cassette is not selected
	  • -205, Command not valid in current state
	  • -228, Invalid parameter value for current configuration	

:MEASure:FASTil

Description	Starts a Fast IL measurement.	
Input	:MEASure:FASTil <*wavelength*>,<*aTime*>,<*delay*>,<*startChannel*>,<*endChannel*>	
Parameters	**Description**	**Value/Range of Values**
<*wavelength*>	Wavelength (nm)	See :SOURce:WAVelength:AVAilable?
<*aTime*>	OPM averaging time (ms)	0.1 to 5000
<*delay*>	Delay after channel switching (ms)	0 to 5000
<*startChannel*>	Start channel	1 to *n* **Note:** Use :PATH:CHANnel:AVAilable? to retrieve the number of available channels for a channel group.
<*endChannel*>	End channel	
Example	`:MEAS:FAST 1550,100,200,1,12`	
Busy?	—	

Error Messages	• Standard error codes (see Error codes) and warning codes (see Warning codes)
	• Command-specific error codes:
	  • -204, Invalid while cassette is not selected
	  • -205, Command not valid in current state
	  • -224, Illegal parameter value
	  • -228, Invalid parameter for current configuration	

:MEASure:FASTil?

Description	Returns the results of the last successful Fast IL measurement as a comma-separated list of values for the channel range.	
Input	:MEASure:FASTil?	
Result	*<IL>*	
Parameters	**Description**	**Value/Range of Values**
<IL>	IL (dB) Note:	—
Example	`:MEAS:FAST?` `0.055,0.072,0.065,0.061,0.048,0.045`	
Busy?	—	

Error Messages	• Standard error codes (see Error codes) and warning codes (see Warning codes)
	• Command-specific error codes:
	  • -204, Invalid while cassette is not selected
	  • -205, Command not valid in current state
	  • -228, Invalid parameter value for current configuration	

:MEASure:HELix

Description	Sets the Helix Factor value.	
Input	:MEASure:HELix <*value*>	
Parameters	**Description**	**Value/Range of Values**
<*value*>	Helix Factor value (percent)	0 to 0.20000
Example	`:MEAS:HEL 0.11351`	
Busy?	—	
Error Messages	Standard error codes (see Error codes) and warning codes (see Warning codes)	

:MEASure:HELix?

Description	Returns the Helix Factor value	
Input	:MEASure:HELix?	
Result	*<value>*	
Parameters	**Description**	**Value/Range of Values**
<value>	Helix Factor value (percent)	0 to 0.20000
Example	`:MEAS:HEL?` 0.11351	
Busy?	—	
Error Messages	Standard error codes (see Error codes) and warning codes (see Warning codes)	

:MEASure:IL?

Description	Returns either the DUT insertion loss (DUT mode) or the reference insertion loss (Reference mode) at the PCT module. **Note:** Use :SENSe:FUNCtion? to retrieve the current PCT measurement mode.	
Input	:MEASure:IL?	
Result	*<IL>*	
Parameters	**Description**	**Value/Range of Values**
<IL>	Insertion loss	—

Examples	• `:MEAS:IL?`
	`1.33`
	• `:MEAS:IL?`
	`---`	

Busy?	—	

Error Messages	• Standard error codes (see Error codes) and warning codes (see Warning codes)
	• Command-specific error codes:
	  • -204, Invalid while cassette is not selected
	  • -205, Command not valid in current state
	  • -228, Invalid parameter value for current configuration	

:MEASure:ILLA

Description	Enables the option to adjust insertion loss based on length.	
Input	:MEASure:ILLA <*state*>	
Parameters	**Description**	**Value/Range of Values**
<*state*>	State of the option to adjust insertion loss based on length	• 0 = Disable • 1 = Enable
Example	`:MEAS:ILLA 1`	
Busy?	—	
Error Messages	• Standard error codes (see Error codes) and warning codes (see Warning codes) • Command-specific error code: • -224, Illegal parameter value	

:MEASure:ILLA?

Description	Returns the state of the option to adjust insertion loss based on length.	
Input	:MEASure:ILLA?	
Result	*<state>*	
Parameters	**Description**	**Value/Range of Values**
<state>	State of the option to adjust insertion loss based on length	• 0 = Disabled • 1 = Enabled
Example	`:MEAS:ILLA?` 1	
Busy?	—	
Error Messages	Standard error codes (see Error codes) and warning codes (see Warning codes)	

:MEASure:LENGth?

Description	Returns one of the following length values: • The DUT length for the current measurement setup when the measurement mode is DUT. • The length of MTJ jumper for the MTJ single connection when the measurement mode is REFERENCE. • The total length of both MTJ jumpers for the MTJ dual connection when the measurement mode is REFERENCE. **Note:** Use :SENSe:FUNCtion? to retrieve the current PCT measurement mode.	
Input	:MEASure:LENGth?	
Result	*<length>*	
Parameters	**Description**	**Value/Range of Values**
<length>	Length (m)	—

Example	• `:MEAS:LENG?`
	`0.00`
	• `:MEAS:LENG?`
	`2.50`	

Busy?	—	

Error Messages	• Standard error codes (see Error codes) and warning codes (see Warning codes)
	• Command-specific error codes:
	  • -204, Invalid while cassette is not selected
	  • -205, Command not valid in current state
	  • -228, Invalid parameter value for current configuration	

:MEASure:ORL?

Description	Returns the DUT ORL (optical return loss) defined by the specified ORL zone (see :MEASure:ORL:SETup) for the current measurement setup.	
Input	:MEASure:ORL? *<method>*,*<origin>*,*<aOffset>*,*<bOffset>*	
Result	*<ORL>*	
Parameters	**Description**	**Value/Range of Values**
<method>	Measurement method	• 1 = Integration method • 2 = Discrete method
<origin>	Marker origin	• 1 = Both markers A & B anchored to DUT start • 2 = Both markers A & B anchored to DUT end • 3 = Marker A anchored to DUT start, and marker B anchored to DUT end
<aOffset>	Marker A offset from origin (m)	*<value>*
<bOffset>	Marker B offset from origin (m)	*<value>*
<ORL>	DUT ORL (dB)	—
Example	`:MEAS:ORL? 1,1,-0.5,1.5` `72.65`	
Busy?	—	

Error Messages	• Standard error codes (see Error codes) and warning codes (see Warning codes)
	• Command-specific error codes:
	  • -204, Invalid while cassette is not selected
	  • -205, Command not valid in current state
	  • -224, Illegal parameter value
	  • -228, Invalid parameter value for current configuration	

:MEASure:ORL:PRESet?

Description	Returns the DUT ORL (optical return loss) preset at the specified origin for the current measurement setup (see :MEASure:ORL:SETup).	
Input	:MEASure:ORL:PRESet? *<origin>*	
Result	*<ORL>*	
Parameters	**Description**	**Value/Range of Values**
<origin>	Marker origin	• 1 = DUT start (input connector) • 2 = DUT end (output connector) • 3 = DUT without connectors
<ORL>	DUT ORL (dB)	—
Example	`:MEAS:ORL:PRES? 1` `72.65`	
Busy?	—	

Error Messages	• Standard error codes (see Error codes) and warning codes (see Warning codes)
	• Command-specific error codes:
	  • -204, Invalid while cassette is not selected
	  • -205, Command not valid in current state
	  • -224, Illegal parameter value
	  • -228, Invalid parameter value for current configuration	

:MEASure:ORL:SETup

Description	Sets up an ORL (optical return loss) zone.	
Input	• Option 1: :MEASure:ORL:SETup <*zone*>,<*preset*> • Option 2: :MEASure:ORL:SETup <*zone*>,<*method*>,<*origin*>,<*aOffset*>,<*bOffset*>	
Parameters	**Description**	**Value/Range of Values**
<*zone*>	ORL zone	• 1 = Zone 1 • 2 = Zone 2
<*preset*>	Predefined <*method*> and <*origin*> settings optimized for the corresponding return loss window	• 0 = Disable zone • 1 = Input connector • 2 = Output connector • 3 = Inside DUT (preset 3)
<*method*>	Measurement method	• 1 = Integration • 2 = Discrete
<*origin*>	Marker origin	• 1 = Both markers A & B anchored to DUT start • 2 = Both markers A & B anchored to DUT end • 3 = Marker A anchored to DUT start, and marker B anchored to DUT end
<*aOffset*>	Marker A offset from origin (m)	<*value*>
<*bOffset*>	Marker B offset from origin (m)	<*value*>
Example	`:MEAS:ORL:SET 1,0`	
Busy?	—	

Error Messages	• Standard error codes (see Error codes) and warning codes (see Warning codes)
	• Command-specific error codes:
	  • -204, Invalid while cassette is not selected
	  • -205, Command not valid in current state
	  • -224, Illegal parameter value
	  • -228, Invalid parameter for current configuration	

:MEASure:ORL:SETup?

Description	Returns setup information for an ORL (optical return loss) zone.	
Input	:MEASure:ORL:SETup? <*zone*>	
Result	<*preset*> or <*method*>,<*origin*>,<*aOffset*>,<*bOffset*> **Note:** Result format depends on whether Option 1 or Option 2 was used for :MEASure:ORL:SETup.	
Parameters	**Description**	**Value/Range of Values**
<*zone*>	ORL zone	• 1 = Zone 1 • 2 = Zone 2
<*preset*>	Predefined <*method*> and <*origin*> settings optimized for the corresponding RL window	• 0 = Disable zone • 1 = Input connector • 2 = Output connector • 3 - Inside DUT
<*method*>	Measurement method	• 1 = Integration • 2 - Discrete
<*origin*>	Marker origin	• 1 = Both markers A & B anchored to DUT start • 2 = Both markers A & B anchored to DUT end • 3 = Marker A anchored to DUT start, and marker B anchored to DUT end
<*aOffset*>	Marker A offset from origin (m)	—
<*bOffset*>	Marker B offset from origin (m)	—
Example	`:MEAS:ORL:SET? 2` `1,1,-0.5,1.5`	
Busy?	—	

Error Messages	• Standard error codes (see Error codes) and warning codes (see Warning codes)
	• Command-specific error codes:
	  • -204, Invalid while cassette is not selected
	  • -205, Command not valid in current state
	  • -228, Invalid parameter value for current configuration	

:MEASure:ORL:ZONe?

Description	Returns the DUT ORL (optical return loss) measurement at the defined RL zone.	
Input	:MEASure:ORL:ZONe? *<zone>*	
Result	*<ORL>*	
Parameters	**Description**	**Value/Range of Values**
<zone>	RL zone defined in the PCT GUI application	• 1 • 2
<ORL>	DUT ORL (dB)	—
Example	`:MEAS:ORL:ZON? 1` `72.65`	
Busy?	—	

Error Messages	• Standard error codes (see Error codes) and warning codes (see Warning codes)
	• Command-specific error codes:
	  • -204, Invalid while cassette is not selected
	  • -205, Command not valid in current state
	  • -224, Illegal parameter value
	  • -228, Invalid parameter value for current configuration	

:MEASure:POWer?

Description	Returns the power measurement for the current measurement setup.	
Input	:MEASure:POWer?	
Result	*<power>*	
Parameters	**Description**	**Value/Range of Values**
<power>	Power (dBm)	• *Power value* • - - - - - - - (TOO LITTLE LIGHT) • +++++++ (TOO MUCH LIGHT)
Example	`:MEAS:POW?` `-12.55`	
Busy?	—	

Error Messages	• Standard error codes (see Error codes) and warning codes (see Warning codes)
	• Command-specific error codes:
	  • -204, Invalid while cassette is not selected
	  • -205, Command not valid in current state
	  • -224, Illegal parameter value	

:MEASure:REF2step

Description	Sets the state of the bidirectional two-step referencing option.	
Input	:MEASure:REF2step <*state*>	
Parameters	**Description**	**Value/Range of Values**
<*state*>	State of the option	• 0 = Disable • 1 = Enable
Example	`:MEAS:REF2 1`	
Busy?	—	

Error Messages	• Standard error codes (see Error codes) and warning codes (see Warning codes)
	• Command-specific error codes:
	  • -204, Invalid while cassette is not selected
	  • -205, Command not valid in current state
	  • -224, Illegal parameter value
	  • -228, Invalid parameter value for current configuration	

:MEASure:REF2step?

Description	Returns the state of the bidirectional two-step referencing option.	
Input	:MEASure:REF2step?	
Result	*<state>*	
Parameters	**Description**	**Value/Range of Values**
<state>	State of the option	• 0 = Disabled • 1 = Enabled
Example	`:MEAS:REF2?` `0`	
Busy?	—	

Error Messages	• Standard error codes (see Error codes) and warning codes (see Warning codes)
	• Command-specific error codes:
	  • -204, Invalid while cassette is not selected
	  • -205, Command not valid in current state
	  • -228, Invalid parameter value for current configuration	

:MEASure:REFAlt

Description	Sets the state of the alternate-input MTJ referencing option. **Note:** Enable this option for a Dual MTJ reference measurement, for example, for testing hybrid DUTs, where a Dual MTJ connection cannot be made during referencing.	
Input	:MEASure:REF2step <*state*>	
Parameters	**Description**	**Value/Range of Values**
<*state*>	State of option	• 0 = Disable • 1 = Enable
Example	`:MEAS:REFA 1`	
Busy?	—	

Error Messages	• Standard error codes (see Error codes) and warning codes (see Warning codes)
	• Command-specific error codes:
	  • -204, Invalid while cassette is not selected
	  • -205, Command not valid in current state
	  • -224, Illegal parameter value
	  • -228, Invalid parameter value for current configuration	

:MEASure:REFAlt?

Description	Returns the state of the alternate-input MTJ referencing option.	
Input	:MEASure:REFAlt?	
Result	*<state>*	
Parameters	**Description**	**Value/Range of Values**
<state>	State of the option	• 0 = Disabled • 1 = Enabled
Example	`:MEAS:REFA?` `0`	
Busy?	—	

Error Messages	• Standard error codes (see Error codes) and warning codes (see Warning codes)
	• Command-specific error codes:
	  • -204, Invalid while cassette is not selected
	  • -205, Command not valid in current state
	  • -228, Invalid parameter value for current configuration	

:MEASure:RESet

Description	Clears all DUT and reference measurements, and resets override settings.
Input	:MEASure:RESet
Example	`:MEAS:RES`
Busy?	—

Error Messages	• Standard error codes (see Error codes) and warning codes (see Warning codes)
	• Command-specific error codes:
	  • -204, Invalid while cassette is not selected
	  • -205, Command not valid in current state

:MEASure:SEIL

Description	Starts a single-ended insertion loss (SEIL) measurement. **Notes:** • The SEIL measurement uses configured measurement settings, such as the Launch port (see :PATH:LAUNch). • Use :MEASure:STATe? to poll the measurement status.	
Input	:MEASure: SEIL <*wavelength*>,<*launchChannel*>,<*receiveChannel*>,<*aTime*>, <*binWidth*>,<*adjustIL*>	
Parameters	**Description**	**Value/Range of Values**
<*wavelength*>	Wavelength (nm)	Use :SOURce:WAVelength:AVAilable?
<*launchChannel*>	Launch channel	• 0 • 1 to *n*
<*receiveChannel*>	Receive channel	• 0 • 1 to *n*
<*aTime*>	Averaging time (s)	5 to 10
<*binWidth*>	Bin width (m)	0.04 to 1000
<*adjustIL*>	Adjustment for measure IL	• 0 = No adjustment • 1 = Adjust for measured IL
Example	`:MEAS:SEIL 1550,3,0,10,2.5,0`	
Busy?	—	

Error Messages	• Standard error codes (see Error codes) and warning codes (see Warning codes)
	• Command-specific error codes:
	  • -204, Invalid while cassette is not selected
	  • -205, Command not valid in current state
	  • -224, Illegal parameter value
	  • -228, Invalid parameter value for current configuration	

:MEASure:SEIL?

Description	Returns the results of the last successful single-ended insertion loss (SEIL) measurement.	
Input	:MEASure:SEIL?	
Result	*<bins>,<distance>,<IL,...,IL>*[,...,*<distance>,<IL,...,IL>*]	
Parameters	**Description**	**Value/Range of Values**
<bins>	Number of bins	—
<distance>	Distance from DUT launch connector (m)	—
<IL>	SEIL measurement (dB)	—
Example	`:MEAS:SEIL?` `3,-2.5,0.33,0.0,0.05,2.5,0.12`	
Busy?	—	

Error Messages	• Standard error codes (see Error codes) and warning codes (see Warning codes)
	• Command-specific error codes:
	  • -204, Invalid while cassette is not selected
	  • -205, Command not valid in current state
	  • -228, Invalid parameter value for current configuration	

:MEASure:STARt

Description	Starts a measurement cycle for the current measurement mode. **Note:** Use :SENSe:FUNCtion? to retrieve the current PCT measurement mode.
Input	:MEASure:STARt
Example	`:MEAS:STAR`
Busy?	—

Error Messages	• Standard error codes (see Error codes) and warning codes (see Warning codes)
	• Command-specific error codes:
	  • -204, Invalid while cassette is not selected
	  • -205, Command not valid in current state

:MEASure:STATe?

Description	Returns the operational state of the PCT application.	
Input	:MEASure:STATe?	
Result	*<state>*	
Parameters	**Description**	**Value/Range of Values**
<state>	PCT application state	• 0 = Application initializing • 1 = Idle (Ready but not measuring) • 2 = Busy (Measurement in progress) • 3 = Fault • 4 = System function (for example, firmware upgrade)
Example	`:MEAS:STAT?` `1`	
Busy?	—	
Error Messages	• Standard error codes (see Error codes) and warning codes (see Warning codes) • Command-specific error code: • -204, Invalid while cassette is not selected	

:MEASure:STOP

Description	Stops the current measurement cycle.
Input	:MEASure:STOP
Example	`:MEAS:STOP`
Busy?	—

Error Messages	• Standard error codes (see Error codes) and warning codes (see Warning codes)
	• Command-specific error codes:
	  • -204, Invalid while cassette is not selected
	  • -205, Command not valid in current state

:PATH:BIDIR

Description	Sets the state of the Dual MTJ Bidirectional Measurement option.	
Input	:PATH:BIDIR <*state*>	
Parameters	**Description**	**Value/Range of Values**
<*state*>	State of the Dual MTJ Bidirectional Measurement option	• 0 = Disabled • 1 = Enabled
Example	`:PATH:BIDIR 1`	
Busy?	—	

Error Messages	• Standard error codes (see Error codes) and warning codes (see Warning codes)
	• Command-specific error codes:
	  • -204, Invalid while cassette is not selected
	  • -205, Command not valid in current state
	  • -224, Illegal parameter value
	  • -228, Invalid parameter value for current configuration	

:PATH:BIDIR?

Description	Returns the state of the Dual MTJ Bidirectional Measurement option.	
Input	:PATH:BIDIR?	
Result	*<state>*	
Parameters	**Description**	**Value/Range of Values**
<state>	State of the Dual MTJ Bidirectional Measurement option	• 0 = Bidirectional option disabled • 1 = Bidirectional option enabled
Example	`:PATH:BIDIR?` `1`	
Busy?	—	

Error Messages	• Standard error codes (see Error codes) and warning codes (see Warning codes)
	• Command-specific error codes:
	  • -204, Invalid while cassette is not selected
	  • -205, Command not valid in current state	

:PATH:CHANnel

Description	Sets the active channel for a channel group.	
Input	:PATH:CHANnel <*group*>,<*channel*>	
Parameters	**Description**	**Value/Range of Values**
<*group*>	Channel group	• 1 = MTJ1 • 2 = MTJ2 • 3 = Receive
<*channel*>	Channel number	1 to *n* **Note:** Use :PATH:CHANnel:AVAilable? to retrieve the number of available channels for a channel group.
Example	`:PATH:CHAN 1,2`	
Busy?	—	

Error Messages	• Standard error codes (see Error codes) and warning codes (see Warning codes)
	• Command-specific error codes:
	  • -204, Invalid while cassette is not selected
	  • -205, Command not valid in current state
	  • -224, Illegal parameter value	

:PATH:CHANnel?

Description	Returns the active channel for a channel group.	
Input	:PATH:CHANnel? *<group>*	
Result	*<channel>*	
Parameters	**Description**	**Value/Range of Values**
<group>	Channel group	• 1 = MTJ1 • 2 = MTJ2 • 3 = Receive
<channel>	Channel number	1 to *n*
Example	`:PATH:CHAN? 1` `1`	
Busy?	—	

Error Messages	• Standard error codes (see Error codes) and warning codes (see Warning codes)
	• Command-specific error codes:
	  • -204, Invalid while cassette is not selected
	  • -205, Command not valid in current state
	  • -224, Illegal parameter value	

:PATH:CHANnel:AVAilable?

Description	Returns the number of available channels in a channel group.	
Input	:PATH:CHANnel:AVAilable? <*group*>	
Result	<*channelCount*>	
Parameters	**Description**	**Value/Range of Values**
<*group*>	Channel group	• 1 = MTJ1 • 2 = MTJ2 • 3 = Receive
<*channelCount*>	Number of channels	1 to *n*
Example	`:PATH:CHAN:AVA? 1` `1`	
Busy?	—	

Error Messages	• Standard error codes (see Error codes) and warning codes (see Warning codes)
	• Command-specific error codes:
	  • -204, Invalid while cassette is not selected
	  • -205, Command not valid in current state
	  • -224, Illegal parameter value	

:PATH:CONNection

Description	Sets the MTJ connection mode.	
Input	:PATH:CONNection <*connection*>	
Parameters	**Description**	**Value/Range of Values**
<*connection*>	MTJ connection mode	• 1 = Single MTJ • 2 = Dual MTJ
Example	`:PATH:CONN 2`	
Busy?	—	

Error Messages	• Standard error codes (see Error codes) and warning codes (see Warning codes)
	• Command-specific error codes:
	  • -204, Invalid while cassette is not selected
	  • -205, Command not valid in current state
	  • -224, Illegal parameter value
	  • -228, Invalid parameter value for current configuration	

:PATH:CONNection?

Description	Returns the MTJ connection mode.	
Input	:PATH:CONNection?	
Result	<*MTJ*>	
Parameters	**Description**	**Value/Range of Values**
<*MTJ*>	MTJ connection mode	• 1 = Single MTJ • 2 = Dual MTJ
Example	`:PATH:CONN?` `1`	
Busy?	—	

Error Messages	• Standard error codes (see Error codes) and warning codes (see Warning codes)
	• Command-specific error codes:
	  • -204, Invalid while cassette is not selected
	  • -205, Command not valid in current state	

:PATH:DUT:LENGth

Description	Sets the DUT length-estimation value. **Note:** The DUT length-estimation value is used while the Auto-Length option is disabled. To retrieve the status of the Auto-Length option, use :PATH:DUT:LENGth:AUTO?.	
Input	:PATH:DUT:LENGth <*length*>	
Parameters	**Description**	**Value/Range of Values**
<*length*>	Length (m)	—
Example	`:PATH:DUT:LENG 3.5`	
Busy?	—	

Error Messages	• Standard error codes (see Error codes) and warning codes (see Warning codes)
	• Command-specific error codes:
	  • -204, Invalid while cassette is not selected
	  • -205, Command not valid in current state
	  • -224, Illegal parameter value
	  • -228, Invalid parameter value for current configuration	

:PATH:DUT:LENGth?

Description	Returns the DUT length-estimation value.	
Input	:PATH:DUT:LENGth?	
Result	*<length>*	
Parameters	**Description**	**Value/Range of Values**
<length>	Length (m)	—
Example	`:PATH:DUT:LENG?` `5.25`	
Busy?	—	

Error Messages	• Standard error codes (see Error codes) and warning codes (see Warning codes)
	• Command-specific error codes:
	  • -204, Invalid while cassette is not selected
	  • -205, Command not valid in current state	

:PATH:DUT:LENGth:AUTO

Description	Sets the state of the DUT Auto-Length option.	
Input	:PATH:DUT:LENGth:AUTO <*state*>	
Parameters	**Description**	**Value/Range of Values**
<*state*>	State of the option	• 0 = Disable Auto Length • 1 = Enable Auto Length **Note:** While the Auto-Length option is disabled, the DUT length estimation value is used. To retrieve the value, use :PATH:DUT:LENGth?.
Example	`:PATH:DUT:LENG:AUTO 0`	
Busy?	—	

Error Messages	• Standard error codes (see Error codes) and warning codes (see Warning codes)
	• Command-specific error codes:
	  • -204, Invalid while cassette is not selected
	  • -205, Command not valid in current state
	  • -224, Illegal parameter value	

:PATH:DUT:LENGth:AUTO?

Description	Returns the state of the DUT Auto-Length option.	
Input	:PATH:DUT:LENGth:AUTO?	
Result	*<state>*	
Parameters	**Description**	**Value/Range of Values**
<state>	State of the option	• 0 = Disabled • 1 = Enabled
Example	`:PATH:DUT:LENG:AUTO?` `1`	
Busy?	—	

Error Messages	• Standard error codes (see Error codes) and warning codes (see Warning codes)
	• Command-specific error codes:
	  • -204, Invalid while cassette is not selected
	  • -205, Command not valid in current state	

:PATH:EOF:MIN

Description	Sets the minimum end of fiber (EOF) distance.	
Input	:PATH:EOF:MIN <*distance*>	
Parameters	**Description**	**Value/Range of Values**
<*distance*>	Minimum EOF distance (m)	0 to *n*
Example	`:PATH:EOF:MIN 3.5`	
Busy?	—	
Error Messages	• Standard error codes (see Error codes) and warning codes (see Warning codes) • Command-specific error code: • -224, Illegal parameter value	

:PATH:EOF:MIN?

Description	Returns the minimum end of fiber (EOF) distance.	
Input	:PATH:EOF:MIN	
Result	*<distance>*	
Parameters	**Description**	**Value/Range of Values**
<distance>	Minimum EOF distance (m)	—
Example	`:PATH:EOF:MIN?` `5.25`	
Busy?	—	
Error Messages	• Standard error codes (see Error codes) and warning codes (see Warning codes)	

:PATH:JUMPer:IL

Description	Sets the insertion loss (IL) override value for an MTJ.	
Input	:PATH:JUMPer:IL *<group>*,*<channel>*,*<IL>*	
Parameters	**Description**	**Value/Range of Values**
<group>	Channel group	• 1 = MTJ1 • 2 = MTJ2 • 3 = Receive MTJ
<channel>	Channel number	1 to *n* **Notes:** • Use :PATH:CHANnel:AVAilable? to retrieve the number of available channels for a channel group. • The value represents either the 1xN switch channel or the receive jumper channel.
<IL>	IL measurement (dB)	—
Example	`:PATH:JUMP:IL 1,2,0.05`	
Busy?	—	

Error Messages	• Standard error codes (see Error codes) and warning codes (see Warning codes)
	• Command-specific error codes:
	  • -204, Invalid while cassette is not selected
	  • -205, Command not valid in current state
	  • -224, Illegal parameter value
	  • -228, Invalid parameter value	

:PATH:JUMPer:IL?

Description	Returns the insertion loss (IL) override value for an MTJ.	
Input	:PATH:JUMPer:IL? *<group>*,*<channel>*	
Result	*<IL>*	
Parameters	**Description**	**Value/Range of Values**
<group>	Channel group	• 1 = MTJ1 • 2 = MTJ2 • 3 = Receive MTJ
<channel>	Channel number	1 to *n* **Notes:** • Use :PATH:CHANnel:AVAilable? to retrieve the number of available channels for a channel group. • The value represents either the 1xN switch channel or the receive jumper channel.
<IL>	IL measurement (dB)	—
Example	`:PATH:JUMP:IL? 1,2` `0.05`	
Busy?	—	

Error Messages	• Standard error codes (see Error codes) and warning codes (see Warning codes)
	• Command-specific error codes:
	  • -204, Invalid while cassette is not selected
	  • -205, Command not valid in current state
	  • -224, Illegal parameter value
	  • -228, Invalid parameter value for current configuration	

:PATH:JUMPer:IL:AUTO

Description	Sets the state of the insertion loss (IL) override option for an MTJ.	
Input	:PATH:JUMPer:IL:AUTO *<group>*,*<channel>*,*<state>*	
Parameters	**Description**	**Value/Range of Values**
<group>	Channel group	• 1 = MTJ1 • 2 = MTJ2 • 3 = Receive MTJ
<channel>	Channel number	1 to *n* **Notes:** • Use :PATH:CHANnel:AVAilable? to retrieve the number of available channels for a channel group. • The value represents either the 1xN switch channel or the receive jumper channel.
<state>	State of the option	• 0 = Use override value • 1 = Use measured value
Example	`:PATH:JUMP:IL:AUTO 1,2,0`	
Busy?	—	

Error Messages	• Standard error codes (see Error codes) and warning codes (see Warning codes)
	• Command-specific error codes:
	  • -204, Invalid while cassette is not selected
	  • -205, Command not valid in current state
	  • -224, Illegal parameter value
	  • -228, Invalid parameter value for current configuration	

:PATH:JUMPer:IL:AUTO?

Description	Returns the state of the IL override option for an MTJ.	
Input	:PATH:JUMPer:IL:AUTO? *<group>*,*<channel>*	
Result	*<state>*	
Parameters	**Description**	**Value/Range of Values**
<group>	Channel group	• 1 = MTJ1 • 2 = MTJ2 • 3 = Receive MTJ
<channel>	Channel number	1 to *n* **Notes:** • Use :PATH:CHANnel:AVAilable? to retrieve the number of available channels for a channel group. • The value represents either the 1xN switch channel or the receive jumper channel.
<state>	State of the option	• 0 = Override value in use • 1 = Measured value in use
Example	`:PATH:JUMP:IL:AUTO? 1,2` `1`	
Busy?	—	

Error Messages	• Standard error codes (see Error codes) and warning codes (see Warning codes)
	• Command-specific error codes:
	  • -204, Invalid while cassette is not selected
	  • -205, Command not valid in current state
	  • -224, Illegal parameter value
	  • -228, Invalid parameter value for current configuration	

:PATH:JUMPer:LENGth

Description	Sets the length-override value for an MTJ.	
Input	:PATH:JUMPer:LENGth *<group>*,*<channel>*,*<length>*	
Parameters	**Description**	**Value/Range of Values**
<group>	Channel group	• 1 = MTJ1 • 2 = MTJ2 • 3 = Receive MTJ
<channel>	Channel number	1 to *n* **Notes:** • Use :PATH:CHANnel:AVAilable? to retrieve the number of available channels for a channel group. • The value represents either the 1xN switch channel or the receive jumper channel.
<length>	Length override value (meters)	—
Example	`:PATH:JUMP:LENG 1,2,3.0`	
Busy?	—	

Error Messages	• Standard error codes (see Error codes) and warning codes (see Warning codes)
	• Command-specific error codes:
	  • -204, Invalid while cassette is not selected
	  • -205, Command not valid in current state
	  • -224, Illegal parameter value
	  • -228, Invalid parameter value for current configuration	

:PATH:JUMPer:LENGth?

Description	Returns the length-override value for an MTJ.	
Input	:PATH:JUMPer:LENGth? *<group>*,*<channel>*	
Result	*<length>*	
Parameters	**Description**	**Value/Range of Values**
<group>	Channel group	• 1 = MTJ1 • 2 = MTJ2 • 3 = Receive MTJ
<channel>	Channel number	1 to *n* **Notes:** • Use :PATH:CHANnel:AVAilable? to retrieve the number of available channels for a channel group. • The value represents either the 1xN switch channel or the receive jumper channel.
<length>	Length override value (meters)	—
Example	`:PATH:JUMP:LENG? 1,2` `2.25`	
Busy?	—	

Error Messages	• Standard error codes (see Error codes) and warning codes (see Warning codes)
	• Command-specific error codes:
	  • -204, Invalid while cassette is not selected
	  • -205, Command not valid in current state
	  • -224, Illegal parameter value
	  • -228, Invalid parameter value for current configuration	

:PATH:JUMPer:LENGth:AUTO

Description	Sets the state of the auto-length-override option for an MTJ.	
Input	:PATH:JUMPer:LENGth:AUTO <*group*>,<*channel*>,<*state*>	
Parameters	**Description**	**Value/Range of Values**
<*group*>	Channel group	• 1 = MTJ1 • 2 = MTJ2 • 3 = Receive MTJ
<*channel*>	Switch or receive jumper channel number	1 to *n* **Note:** Use :PATH:CHANnel:AVAilable? to retrieve the number of available channels for a channel group.
<*state*>	State of the option	• 0 = Use override value • 1 = Use measured value
Example	`:PATH:JUMP:LENG:AUTO 1,2,1`	
Busy?	—	

Error Messages	• Standard error codes (see Error codes) and warning codes (see Warning codes)
	• Command-specific error codes:
	  • -204, Invalid while cassette is not selected
	  • -205, Command not valid in current state
	  • -224, Illegal parameter value
	  • -228, Invalid parameter value for current configuration	

:PATH:JUMPer:LENGth:AUTO?

Description	Returns the state of length-override option for an MTJ.	
Input	:PATH:JUMPer:LENGth:AUTO? *<group>*,*<channel>*	
Result	*<state>*	
Parameters	**Description**	**Value/Range of Values**
<group>	Channel group	• 1 = MTJ1 • 2 = MTJ2 • 3 = Receive MTJ
<channel>	Channel number	—I
<state>	State of the option	• 0 = Enabled • 1 = Disabled
Example	`:PATH:JUMP:LENG:AUTO? 1,1` `1`	
Busy?	—	

Error Messages	• Standard error codes (see Error codes) and warning codes (see Warning codes)
	• Command-specific error codes:
	  • -204, Invalid while cassette is not selected
	  • -205, Command not valid in current state
	  • -224, Illegal parameter value
	  • -228, Invalid parameter value for current configuration	

:PATH:JUMPer:RESet

Description	Resets the specified MTJ part assignments so that the part and serial numbers are not assigned and tracked.	
Input	:PATH:JUMPer:RESet [<*group*>][,<*channel*>]	
Parameters	**Description**	**Value/Range of Values**
<*group*>	Channel group (optional)	• 0 = All MTJs • 1 = MTJ1 • 2 = MTJ2 • 3 = Receive MTJ
<*channel*>	Channel number (optional)	0 to *n* **Note:** The value represents either the 1xN switch channel or the receive jumper channel.
Examples	• `:PATH:JUMP:RES 1` • `:PATH:JUMP:RES 1,1`	
Busy?	—	

Error Messages	• Standard error codes (see Error codes) and warning codes (see Warning codes)
	• Command-specific error codes:
	  • -204, Invalid while cassette is not selected
	  • -205, Command not valid in current state
	  • -224, Illegal parameter value
	  • -228, Invalid parameter value for current configuration	

:PATH:JUMPer:RESet:MEASure

Description	Clears IL/length values measured with one or all MTJs.	
Input	:PATH:JUMPer:RESet:MEASure [<*group*>][,<*channel*>]	
Parameters	**Description**	**Value/Range of Values**
<*group*>	Channel group (optional)	• 0 = All MTJs • 1 = MTJ1 • 2 = MTJ2 • 3 = Receive MTJ **Note:** Omitting this option applies the value 0 by default.
<*channel*>	Channel number (optional)	0 to *n* **Notes:** • Omitting this option applies the value 0 by default. • The value represents either the 1xN switch channel or the receive jumper channel.
Example	`:PATH:JUMP:RES:MEAS`	
Busy?	—	

Error Messages	• Standard error codes (see Error codes) and warning codes (see Warning codes)
	• Command-specific error codes:
	  • -204, Invalid while cassette is not selected
	  • -205, Command not valid in current state
	  • -224, Illegal parameter value
	  • -228, Invalid parameter value for current configuration	

:PATH:LAUNch

Description	Sets the source launch port for a PCT module with two outputs.	
Input	:PATH:LAUNch <*port*>	
Parameters	**Description**	**Value/Range of Values**
<*port*>	Source launch port	• 1 = J1 Out • 2 = J2 Out
Example	`:PATH:LAUN 2`	
Busy?	—	

Error Messages	• Standard error codes (see Error codes) and warning codes (see Warning codes)
	• Command-specific error codes:
	  • -204, Invalid while cassette is not selected
	  • -205, Command not valid in current state
	  • -224, Illegal parameter value
	  • -228, Invalid parameter value for current configuration	

:PATH:LAUNch?

Description	Returns the source launch port for a PCT module with two outputs.	
Input	:PATH:LAUNch?	
Result	*<port>*	
Parameters	**Description**	**Value/Range of Values**
<port>	Source launch port	• 1 = J1 Out • 2 = J2 Out
Example	`:PATH:LAUN?` `2`	
Busy?	—	

Error Messages	• Standard error codes (see Error codes) and warning codes (see Warning codes)
	• Command-specific error codes:
	  • -204, Invalid while cassette is not selected
	  • -205, Command not valid in current state	

:PATH:LAUNch:AVAilable?

Description	Returns the number of available source launch ports for a PCT module with two outputs.	
Input	:PATH:LAUNch:AVAilable?	
Result	*<ports>*	
Parameters	**Description**	**Value/Range of Values**
<ports>	Channel group	• 1 = PCT module without 2x2 switch • 2 = PCT module with 2x2 switch and bidirectional option
Example	`:PATH:LAUN:AVA?` `2`	
Busy?	—	

Error Messages	• Standard error codes (see Error codes) and warning codes (see Warning codes)
	• Command-specific error codes:
	  • -204, Invalid while cassette is not selected
	  • -205, Command not valid in current state	

:PATH:LIST

Description	Sets each switch channel to use for measurements.	
Input	:PATH:LIST <*switch*>,<*channel*>[,…,<*channel*>]	
Parameters	**Description**	**Value/Range of Values**
<*switch*>	Switch number	• 1 = Switch 1 (SW1) • 2 = Switch 2 (SW2)
<*channel*>	Channel number or range	1 to *n* **Note:** Use :PATH:CHANnel:AVAilable? to retrieve the number of available channels for a channel group.
Example	`:PATH:LIST 1,1-10,12`	
Busy?	—	

Error Messages	• Standard error codes (see Error codes) and warning codes (see Warning codes)
	• Command-specific error codes:
	  • -204, Invalid while cassette is not selected
	  • -205, Command not valid in current state
	  • -224, Illegal parameter value	

:PATH:LIST?

Description	Returns each switch channel used for measurements.	
Input	:PATH:LIST? <*switch*>	
Result	<*channel*>[,…,<*channel*>]	
Parameters	**Description**	**Value/Range of Values**
<*switch*>	Switch number	• 1 = Switch 1 (SW1) • 2 = Switch 2 (SW2)
<*channel*>	Channel number or range	1 to *n* **Note:** Use :PATH:CHANnel:AVAilable? to retrieve the number of available channels for a channel group.
Example	`:PATH:LIST? 2` `1-24`	
Busy?	—	

Error Messages	• Standard error codes (see Error codes) and warning codes (see Warning codes)
	• Command-specific error codes:
	  • -204, Invalid while cassette is not selected
	  • -205, Command not valid in current state
	  • -224, Illegal parameter value	

:PATH:RECeive

Description	Sets the usage state of the receive jumper. **Note:** This option is used when then MTJ connection mode is set to Single MTJ (see :PATH:CONNection) and the measurement mode is set to DUT (see :SENSe:FUNCtion).	
Input	:PATH:RECeive <*usageState*>	
Parameters	**Description**	**Value/Range of Values**
<*usageState*>	Usage state of the receive jumper	• 0 = Do not use receive jumper • 1 = Use receive jumper
Example	`:PATH:REC 1`	
Busy?	—	

Error Messages	• Standard error codes (see Error codes) and warning codes (see Warning codes)
	• Command-specific error codes:
	  • -204, Invalid while cassette is not selected
	  • -205, Command not valid in current state
	  • -224, Illegal parameter value	

:PATH:RECeive?

Description	Returns the usage state of the receive jumper.	
Input	:PATH:RECeive?	
Result	*<usageState>*	
Parameters	**Description**	**Value/Range of Values**
<usageState>	Usage state of the receive jumper	• 0 = Do not use receive jumper • 1 = Use receive jumper
Example	`:PATH:REC?` `1`	
Busy?	—	

Error Messages	• Standard error codes (see Error codes) and warning codes (see Warning codes)
	• Command-specific error codes:
	  • -204, Invalid while cassette is not selected
	  • -205, Command not valid in current state	

:PMAP:ENABle

Description	Sets the state of the Port Map channel selection option. **Note:** Using this command automatically affects values defined by the following commands: • :PATH:CONNection: The value of the <*connection*> parameter is automatically set to Dual MTJ mode. • :PATH:RECeive: The value of the <*usageState*> parameter for the receive jumper is automatically set to 0 (Do not use)	
Input	:PMAP:ENABle <*state*>	
Parameters	**Description**	**Value/Range of Values**
<*state*>	State of the option	• 0 = Disable • 1 = Enable
Example	`:PMAP:ENAB 1`	
Busy?	—	

Error Messages	• Standard error codes (see Error codes) and warning codes (see Warning codes)
	• Command-specific error codes:
	  • -204, Invalid while cassette is not selected
	  • -205, Command not valid in current state
	  • -224, Illegal parameter value
	  • -228, Invalid parameter value for current configuration	

:PMAP:ENABle?

Description	Returns the status of the Port Map channel selection option.	
Input	:PMAP:ENABle?	
Result	*<state>*	
Parameters	**Description**	**Value/Range of Values**
<state>	State of the option	• 0 = Disabled • 1 = Enabled
Example	`:PMAP:ENAB?` `0`	
Busy?	—	

Error Messages	• Standard error codes (see Error codes) and warning codes (see Warning codes)
	• Command-specific error codes:
	  • -204, Invalid while cassette is not selected
	  • -205, Command not valid in current state
	  • -228, Invalid parameter value for current configuration	

:PMAP:MEASure:ALL

Description	Measure all unassigned paths in a variable Port Map table.
Input	:PMAP:MEASure:ALL
Example	`:PMAP:MEAS:ALL`
Busy?	—

Error Messages	• Standard error codes (see Error codes) and warning codes (see Warning codes)
	• Command-specific error codes:
	  • -204, Invalid while cassette is not selected
	  • -205, Command not valid in current state
	  • -228, Invalid parameter value for current configuration

:PMAP:MEASure:LIVE

Description	Sets the channel-link path for a live-variable channel in a variable Port Map table.	
Input	:PMAP:MEASure:LIVE <*channel*>	
Parameters	**Description**	**Value/Range of Values**
<*channel*>	Live-variable channel number	1 to *n* **Note:** Use :PATH:CHANnel:AVAilable? to retrieve the number of available channels for a channel group.
Example	`:PMAP:MEAS:LIVE 3`	
Busy?	—	

Error Messages	• Standard error codes (see Error codes) and warning codes (see Warning codes)
	• Command-specific error codes:
	  • -204, Invalid while cassette is not selected
	  • -205, Command not valid in current state
	  • -224, Illegal parameter value
	  • -228, Invalid parameter value for current configuration	

:PMAP:MEASure:LIVE?

Description	Returns the channel-link path for a live-variable channel in a variable Port Map table.	
Input	:PMAP:MEASure:LIVE? <*channel*>	
Result	<*link*>	
Parameters	**Description**	**Value/Range of Values**
<*channel*>	Live-variable channel number	1 to *n* **Note:** Use :PATH:CHANnel:AVAilable? to retrieve the number of available channels for a channel group.
<*link*>	Linked channel number	
Example	`:PMAP:MEAS:LIVE? 3` `5`	
Busy?	—	

Error Messages	• Standard error codes (see Error codes) and warning codes (see Warning codes)
	• Command-specific error codes:
	  • -204, Invalid while cassette is not selected
	  • -205, Command not valid in current state
	  • -224, Illegal parameter value
	  • -228, Invalid parameter value for current configuration	

:PMAP:MEASure:VALid

Description	Performs a Port Map validation measurement for all channel-link paths in the Port Map table.
Input	:PMAP:MEASure:VALid
Example	`:PMAP:MEAS:VAL`
Busy?	—

Error Messages	• Standard error codes (see Error codes) and warning codes (see Warning codes)
	• Command-specific error codes:
	  • -204, Invalid while cassette is not selected
	  • -205, Command not valid in current state
	  • -228, Invalid parameter value for current configuration

:PMAP:MEASure:VALid?

Description	Returns the results of a Port Map validation measurement.	
Input	:PMAP:MEASure:VALid	
Result	<*path*>[,...,<*path*>]	
Parameters	**Description**	**Value/Range of Values**
<*path*>	Path validation	• 0 = All paths are valid • 1 to *n* = Path has invalid link
Example	`:PMAP:MEAS:VAL?` `2,6`	
Busy?	—	

Error Messages	• Standard error codes (see Error codes) and warning codes (see Warning codes)
	• Command-specific error codes:
	  • -204, Invalid while cassette is not selected
	  • -205, Command not valid in current state
	  • -228, Invalid parameter value for current configuration	

:PMAP:PATH:LINK?

Description	Returns the channel-link for a given Port Map path.	
Input	:PMAP:PATH:LINK? <*path*>	
Result	<*channelSW1*>[,<*channelSW2*>]	
Parameters	**Description**	**Value/Range of Values**
<*path*>	Port Map path	1 to *n*
<*channelSW1*>	SW1 channel number	1 to *n* **Note:** Use :PATH:CHANnel:AVAilable? to retrieve the number of available channels for a channel group.
<*channelSW2*>	SW2 channel number	
Example	`:PMAP:PATH:LINK? 3` `3`	
Busy?	—	

Error Messages	• Standard error codes (see Error codes) and warning codes (see Warning codes)
	• Command-specific error codes:
	  • -204, Invalid while cassette is not selected
	  • -205, Command not valid in current state
	  • -224, Illegal parameter value
	  • -228, Invalid parameter value for current configuration	

:PMAP:PATH:SELect

Description	Selects a channel-link path in the Port Map table.	
Input	:PMAP:PATH:SELect <*path*>	
Parameters	**Description**	**Value/Range of Values**
<*path*>	Port Map path	1 to *n*
Example	`:PMAP:PATH:SEL 4`	
Busy?	—	

Error Messages	• Standard error codes (see Error codes) and warning codes (see Warning codes)
	• Command-specific error codes:
	  • -204, Invalid while cassette is not selected
	  • -205, Command not valid in current state
	  • -224, Illegal parameter value
	  • -228, Invalid parameter value for current configuration	

:PMAP:PATH:SELect?

Description	Returns the selected channel-link path in the Port Map table.	
Input	:PMAP:PATH:SELect?	
Result	*<path>*	
Parameters	**Description**	**Value/Range of Values**
<path>	Port map path	1 to *n*
Example	`:PMAP:PATH:SEL?` `3`	
Busy?	—	

Error Messages	• Standard error codes (see Error codes) and warning codes (see Warning codes)
	• Command-specific error codes:
	  • -204, Invalid while cassette is not selected
	  • -205, Command not valid in current state
	  • -228, Invalid parameter value for current configuration	

:PMAP:PATH:SIZE?

Description	Returns the number of available Port Map paths.	
Input	:PMAP:PMAP:SIZE?	
Result	*<size>*	
Parameters	**Description**	**Value/Range of Values**
<size>	Number of Port Map paths	—
Example	`:PMAP:PATH:SIZE?` `4`	
Busy?	—	

Error Messages	• Standard error codes (see Error codes) and warning codes (see Warning codes)
	• Command-specific error codes:
	  • -204, Invalid while cassette is not selected
	  • -205, Command not valid in current state
	  • -228, Invalid parameter value for current configuration	

:PMAP:SETup:FIRSt?

Description	Returns the first defined channel for a switch.	
Input	:PMAP:SETup:FIRSt? <*switch*>	
Result	<*channel*>	
Parameters	**Description**	**Value/Range of Values**
<*switch*>	Switch number	• 1 = Switch 1 (SW1) • 2 = Switch 2 (SW2)
<*channel*>	Switch channel number	—
Example	`:PMAP:SET:FIRS? 2` `4`	
Busy?	—	

Error Messages	• Standard error codes (see Error codes) and warning codes (see Warning codes)
	• Command-specific error codes:
	  • -204, Invalid while cassette is not selected
	  • -205, Command not valid in current state
	  • -224, Illegal parameter value
	  • -228, Invalid parameter value for current configuration	

:PMAP:SETup:INIT:LIST

Description	Initializes the Port Map table when channel lists are used. **Note:** A hexadecimal representation of a bit-field is used so that larger arbitrary channel lists can be represented with fewer characters.	
Input	:PMAP:SETup:INIT:LIST <*listSW1*>,<*listSW2*>,<*mode*>	
Parameters	**Description**	**Value/Range of Values**
<*listSW1*>	Hex representation of Switch 1 (SW1) channel selection.	To specify an arbitrary channel list, use a bit-field to specify with a one (1) where a channel is to be selected, group every four (4) bits, and then convert each to a hexadecimal number; for example, • <*listSW1*>: 1,3,5,7 = 1010101 → 1010 1010 → AA • <*listSW2*>: 2,4,6,8 = 01010101 → 0101 0101 → 55
<*listSW2*>	Hex representation of Switch 2 (SW2) channel selection.	
<*mode*>	Channel mode	• 0 = Fixed SW1 and SW2 channels • 1 = Variable SW1 channels • 2 = Variable SW2 channels
Example	`:PMAP:SET:INIT:LIST AA,55,0`	
Busy?	—	

Error Messages	• Standard error codes (see Error codes) and warning codes (see Warning codes)
	• Command-specific error codes:
	  • -204, Invalid while cassette is not selected
	  • -205, Command not valid in current state
	  • -224, Illegal parameter value
	  • -228, Invalid parameter value for current configuration	

:PMAP:SETup:INIT:RANGe

Description	Initializes the Port Map table when channel ranges are used.	
Input	:PMAP:SETup:INIT:RANGe *<startSW1>*,*<startSW1>*,*<size>*,*<mode>*	
Parameters	**Description**	**Value/Range of Values**
<startSW1>	Start of channel range on Switch 1 (SW1)	1 to n **Note:** Use :PATH:CHANnel:AVAilable? to retrieve the number of available channels for a channel group.
<startSW2>	Start of channel range on Switch 2 (SW2)	
<size>	Number of channels in each range	
<mode>	Channel mode	• 0 = Fixed channels for both switches • 1 = Variable SW1 channels • 2 = Variable SW2 channels
Example	`:PMAP:SET:INIT:RANG 1,5,4,0`	
Busy?	—	

Error Messages	• Standard error codes (see Error codes) and warning codes (see Warning codes)
	• Command-specific error codes:
	  • -204, Invalid while cassette is not selected
	  • -205, Command not valid in current state
	  • -224, Illegal parameter value
	  • -228, Invalid parameter value for current configuration	

:PMAP:SETup:LAST?

Description	Returns the last defined channel for a switch.	
Input	:PMAP:SETup:LAST? <*switch*>	
Result	<*channel*>	
Parameters	**Description**	**Value/Range of Values**
<*switch*>	Switch number	• 1 = Switch 1 (SW1) • 2 = Switch 2 (SW2)
<*channel*>	Switch channel number	1 to *n*
Example	`:PMAP:SET:LAST? 2` `12`	
Busy?	—	

Error Messages	• Standard error codes (see Error codes) and warning codes (see Warning codes)
	• Command-specific error codes:
	  • -204, Invalid while cassette is not selected
	  • -205, Command not valid in current state
	  • -224, Illegal parameter value
	  • -228, Invalid parameter value for current configuration	

:PMAP:SETup:LINK

Description	Sets the channel-link paths in the Port Map table for a switch. **Note:** Supported by non-fixed tables only (see :PMAP:SETup:INIT:RANGe).	
Input	:PMAP:SETup:LINK <*fixedChannel*>,<*variableChannel*>	
Parameters	**Description**	**Value/Range of Values**
<*fixedChannel*>	Fixed switch channel number	1 to *n* **Note:** Use :PATH:CHANnel:AVAilable? to retrieve the number of available channels for a channel group.
<*variableChannel*>	Variable switch channel number	
Example	`:PMAP:SET:LINK 4,4`	
Busy?	—	

Error Messages	• Standard error codes (see Error codes) and warning codes (see Warning codes)
	• Command-specific error codes:
	  • -204, Invalid while cassette is not selected
	  • -205, Command not valid in current state
	  • -224, Illegal parameter value
	  • -228, Invalid parameter value for current configuration	

:PMAP:SETup:LIST?

Description	Returns the channel-link paths in the Port Map table for a switch.	
Input	:PMAP:SETup:LIST? *<switch>*	
Result	*<channel>*[,*<channel>*,…,*<channel>*]	
Parameters	**Description**	**Value/Range of Values**
<switch>	Switch number	• 1 = Switch 1 (SW1) • 2 = Switch 2 (SW2)
<channel>	Channel number	1 to *n*
Example	`:PMAP:SET:LIST?` `4,5,6,7,8,9,10,11,12`	
Busy?	—	

Error Messages	• Standard error codes (see Error codes) and warning codes (see Warning codes)
	• Command-specific error codes:
	  • -204, Invalid while cassette is not selected
	  • -205, Command not valid in current state
	  • -224, Illegal parameter value
	  • -228, Invalid parameter value for current configuration	

:PMAP:SETup:LOCK

Description	Locks the variable Port Map table.	
Input	:PMAP:SETup:LOCK <*state*>	
Parameters		
<*state*>	Lock state	• 0 = Unlock (default) • 1 = Lock
Example	`:PMAP:SET:LOCK 1`	
Busy?	—	

Error Messages	• Standard error codes (see Error codes) and warning codes (see Warning codes)
	• Command-specific error codes:
	  • -204, Invalid while cassette is not selected
	  • -205, Command not valid in current state
	  • -224, Illegal parameter value
	  • -228, Invalid parameter value for current configuration	

:PMAP:SETup:LOCK?

Description	Returns the lock state of the variable Port Map table.	
Input	:PMAP:SETup:LOCK?	
Result	*<state>*	
Parameters	**Description**	**Value/Range of Values**
<state>	Lock state	• 0 = Unlocked • 1 = Locked
Example	`:PMAP:SET:LOCK?` `0`	
Busy?	—	

Error Messages	• Standard error codes (see Error codes) and warning codes (see Warning codes)
	• Command-specific error codes:
	  • -204, Invalid while cassette is not selected
	  • -205, Command not valid in current state
	  • -228, Invalid parameter value for current configuration	

:PMAP:SETup:MODE?

Description	Returns the Port Map table mode.	
Input	:PMAP:SETup:MODE?	
Result	*<mode>*	
Parameters	**Description**	**Value/Range of Values**
<mode>	Port map table mode	• 0 = Fixed channels for both switches • 1 = SW1 channels variable • 2 = SW2 channels variable
Example	`:PMAP:SET:MODE?` `0`	
Busy?	—	

Error Messages	• Standard error codes (see Error codes) and warning codes (see Warning codes)
	• Command-specific error codes:
	  • -204, Invalid while cassette is not selected
	  • -205, Command not valid in current state
	  • -228, Invalid parameter value for current configuration	

:PMAP:SETup:RESet

Description	Resets all variable channel assignments in the Port Map table.
Input	:PMAP:SETup:RESet
Example	`:PMAP:SET:RES`
Busy?	—

Error Messages	• Standard error codes (see Error codes) and warning codes (see Warning codes)
	• Command-specific error codes:
	  • -204, Invalid while cassette is not selected
	  • -205, Command not valid in current state
	  • -228, Invalid parameter value for current configuration

:PMAP:SETup:SIZE?

Description	Returns the number of rows (Port Map paths) in the Port Map table.	
Input	:PMAP:SETup:SIZE?	
Result	*<size>*	
Parameters	**Description**	**Value/Range of Values**
<size>	Number of rows (Port Map paths)	—
Example	`:PMAP:SET:SIZE?` `12`	
Busy?	—	

Error Messages	• Standard error codes (see Error codes) and warning codes (see Warning codes)
	• Command-specific error codes:
	  • -204, Invalid while cassette is not selected
	  • -205, Command not valid in current state
	  • -228, Invalid parameter value for current configuration	

:SENSe:ATIMe

Description	Sets the measurement averaging time to use for measurements.	
Input	:SENSe:ATIMe <Secs>	
Parameters	**Description**	**Value/Range of Values**
<time>	Averaging times (seconds)	Use :SENSe:ATIMe:AVAilable? to retrieve the list of available averaging time values.
Example	`:SENS:ATIM 5`	
Busy?	—	

Error Messages	• Standard error codes (see Error codes) and warning codes (see Warning codes)
	• Command-specific error codes:
	  • -204, Invalid while cassette is not selected
	  • -205, Command not valid in current state
	  • -224, Illegal parameter value	

:SENSe:ATIMe?

Description	Returns the measurement averaging time used for measurements.	
Input	:SENSe:ATIMe?	
Result	*<time>*	
Parameters	**Description**	**Value/Range of Values**
<time>	Averaging times (seconds)	—
Example	`:SENS:ATIM?` `10`	
Busy?	—	

Error Messages	• Standard error codes (see Error codes) and warning codes (see Warning codes)
	• Command-specific error codes:
	  • -204, Invalid while cassette is not selected
	  • -205, Command not valid in current state	

:SENSe:ATIMe:AVAilable?

Description	Returns the available measurement averaging times.	
Input	:SENSe:ATIMe:AVAilable?	
Result	*<time>*, … *<time>*	
Parameters	**Description**	**Value/Range of Values**
<time>	Available averaging times (seconds)	—
Example	`:SENS:ATIM:AVA?` `1,2,5,10,30,60`	
Busy?	—	

Error Messages	• Standard error codes (see Error codes) and warning codes (see Warning codes)
	• Command-specific error codes:
	  • -204, Invalid while cassette is not selected
	  • -205, Command not valid in current state	

:SENSe:FUNCtion

Description	Sets the PCT measurement mode.	
Input	:SENSe:FUNCtion <*mode*>	
Parameters	**Description**	**Value/Range of Values**
<*mode*>	Measurement mode	• 0 = Reference • 1 = DUT
Example	`:SENS:FUNC 1`	
Busy?	—	

Error Messages	• Standard error codes (see Error codes) and warning codes (see Warning codes)
	• Command-specific error codes:
	  • -204, Invalid while cassette is not selected
	  • -205, Command not valid in current state
	  • -224, Illegal parameter value	

:SENSe:FUNCtion?

Description	Returns the current PCT measurement mode.	
Input	:SENSe:FUNCtion?	
Result	*<mode>*	
Parameters	**Description**	**Value/Range of Values**
<mode>	Measurement mode	• 0 = Reference • 1 = DUT
Example	`:SENS:FUNC?` `1`	
Busy?	—	

Error Messages	• Standard error codes (see Error codes) and warning codes (see Warning codes)
	• Command-specific error codes:
	  • -204, Invalid while cassette is not selected
	  • -205, Command not valid in current state	

:SENSe:ILONly

Description	Sets the state of the IL-only DUT measurement option.	
Input	:SENSe:ILONly <*state*>	
Parameters	**Description**	**Value/Range of Values**
<*state*>	State of the option	• 0 = Disable • 1 = Enable
Example	`:SENS:ILON 0`	
Busy?	—	

Error Messages	• Standard error codes (see Error codes) and warning codes (see Warning codes)
	• Command-specific error codes:
	  • -204, Invalid while cassette is not selected
	  • -205, Command not valid in current state
	  • -224, Illegal parameter value	

:SENSe:ILONly?

Description	Returns the state of the IL-only DUT measurement option.	
Input	:SENSe:ILONly?	
Result	*<state>*	
Parameters	**Description**	**Value/Range of Values**
<state>	State of the option	• 0 = Disabled • 1 = Enabled
Example	`:SENS:ILON?` `0`	
Busy?	—	

Error Messages	• Standard error codes (see Error codes) and warning codes (see Warning codes)
	• Command-specific error codes:
	  • -204, Invalid while cassette is not selected
	  • -205, Command not valid in current state	

:SENSe:OPM

Description	Sets the OPM detector to use for IL measurements.	
Input	:SENSe:OPM <*index*>	
Parameters	**Description**	**Value/Range of Values**
<*index*>	OPM detector identifier	• 0 = PCT OPM • 1 to 4 = Remote OPM detector • **Note:** The remote OPM detector must be configured (see :FACTory:CONFig:OPM).
Example	`:SENS:OPM 1`	
Busy?	—	

Error Messages	• Standard error codes (see Error codes) and warning codes (see Warning codes)
	• Command-specific error codes:
	  • -204, Invalid while cassette is not selected
	  • -205, Command not valid in current state
	  • -224, Illegal parameter value	

:SENSe:OPM?

Description	Returns the OPM detector used for IL measurements.	
Input	:SENSe:OPM?	
Result	*<index>*	
Parameters	**Description**	**Value/Range of Values**
<index>	OPM detector identifier	• 0 = PCT OPM • 1 to 4 = Remote OPM detector **Note:** The remote OPM detector must be configured (see :FACTory:CONFig:OPM).
Example	`:SENS:OPM?` `0`	
Busy?	—	

Error Messages	• Standard error codes (see Error codes) and warning codes (see Warning codes)
	• Command-specific error codes:
	  • -204, Invalid while cassette is not selected
	  • -205, Command not valid in current state	

:SENSe:RANGe

Description	Sets the DUT measurement range.	
Input	:SENSe:RANGe <*range*>	
Parameters	**Description**	**Value/Range of Values**
<*range*>	Measurement range (m/km)	• 0 = 200 m • 1 = 500 m • 2 = 1k m • 3 = 2 km • 4 = 5 km • 5 = 10 km
Example	`:SENS:RANG 0`	
Busy?	—	

Error Messages	• Standard error codes (see Error codes) and warning codes (see Warning codes)
	• Command-specific error codes:
	  • -204, Invalid while cassette is not selected
	  • -205, Command not valid in current state
	  • -224, Illegal parameter value	

:SENSe:RANGe?

Description	Returns the DUT measurement range.	
Input	:SENSe:RANGe?	
Result	*<range>*	
Parameters	**Description**	**Value/Range of Values**
<range>	Measurement range (m/km)	• 0 = 200 m • 1 = 500 m • 2 = 1 km • 3 = 2 km • 4 = 5 km • 5 = 10 km
Example	`:SENS:RANG?` `0`	
Busy?	—	

Error Messages	• Standard error codes (see Error codes) and warning codes (see Warning codes)
	• Command-specific error codes:
	  • -204, Invalid while cassette is not selected
	  • -205, Command not valid in current state	

:SENSe:TEMPerature

Description	Sets the temperature-sensitivity level.	
Input	:SENSe:TEMPerature <*tempSensitivity*>	
Parameters	**Description**	**Value/Range of Values**
<*tempSensitivity*>	Temperature sensitivity level	• 0 = Very Low • 1 = Low • 2 = Medium • 3 = High • 4 = Very High
Example	`:SENS:TEMP 1`	
Busy?	—	

Error Messages	• Standard error codes (see Error codes) and warning codes (see Warning codes)
	• Command-specific error codes:
	  • -204, Invalid while cassette is not selected
	  • -205, Command not valid in current state
	  • -224, Illegal parameter value	

:SENSe:TEMPerature?

Description	Returns the temperature-sensitivity level.	
Input	:SENSe:TEMPerature?	
Result	*<tempSensitivity>*	
Parameters	**Description**	**Value/Range of Values**
<tempSensitivity>	Temperature sensitivity level	• 0 = Very Low • 1 = Low • 2 = Medium • 3 = High • 4 = Very High
Example	`:SENS:TEMP?` `3`	
Busy?	—	

Error Messages	• Standard error codes (see Error codes) and warning codes (see Warning codes)
	• Command-specific error codes:
	  • -204, Invalid while cassette is not selected
	  • -205, Command not valid in current state	

:SOURce:CONTinuous

Description	Sets the state of the continuous-scanning mode option.	
Input	:SOURce:CONTinuous <*state*>	
Parameters	**Description**	**Value/Range of Values**
<*state*>	State of the option	• 0 = Disable • 1 = Enable
Example	`:SOUR:CONT 1`	
Busy?	—	

Error Messages	• Standard error codes (see Error codes) and warning codes (see Warning codes)
	• Command-specific error codes:
	  • -204, Invalid while cassette is not selected
	  • -205, Command not valid in current state
	  • -224, Illegal parameter value	

:SOURce:CONTinuous?

Description	Returns the state of the continuous-scanning mode option.	
Input	:SOURce:CONTinuous?	
Result	*<state>*	
Parameters	**Description**	**Value/Range of Values**
<state>	State of the option	• 0 = Disabled • 1 = Enabled
Example	`:SOUR:CONT?` `1`	
Busy?	—	

Error Messages	• Standard error codes (see Error codes) and warning codes (see Warning codes)
	• Command-specific error codes:
	  • -204, Invalid while cassette is not selected
	  • -205, Command not valid in current state	

:SOURce:LIST

Description	Sets one or more source wavelengths to use for measurements.	
Input	:SOURce:LIST <*wavelength*>[,…,<wavelength>]	
Parameters	**Description**	**Value/Range of Values**
<*wavelength*>	Wavelength (nm)	Use :SOURce:WAVelength:AVAilable? or :CONFig? to retrieve the list of available wavelengths.
Example	`:SOUR:LIST 1310,1550,1625`	
Busy?	—	

Error Messages	• Standard error codes (see Error codes) and warning codes (see Warning codes)
	• Command-specific error codes:
	  • -204, Invalid while cassette is not selected
	  • -205, Command not valid in current state
	  • -224, Illegal parameter value	

:SOURce:LIST?

Description	Returns the list of source wavelengths being used for measurements.	
Input	:SOURce:LIST?	
Result	<*wavelength*>[,…,<*wavelength*>]	
Parameters	**Description**	**Value/Range of Values**
<*wavelength*>	Wavelength (nm)	—
Example	`:SOUR:LIST?` `1310,1550,1625`	
Busy?	—	

Error Messages	• Standard error codes (see Error codes) and warning codes (see Warning codes)
	• Command-specific error codes:
	  • -204, Invalid while cassette is not selected
	  • -205, Command not valid in current state	

:SOURce:WARMup

Description	Sets the status of the option to warm up a source wavelength for upcoming measurements.	
Input	:SOURce:WARMup <*status*>	
Parameters	**Description**	**Value/Range of Values**
<*status*>	Status of the option	• None • <*wavelength*> **Note:** Use the command :SOURce:WAVelength:AVAilable? or :CONFig? to retrieve the list of available wavelengths.
Example	`:SOUR:WARM 1550`	
Busy?	—	

Error Messages	• Standard error codes (see Error codes) and warning codes (see Warning codes)
	• Command-specific error codes:
	  • -204, Invalid while cassette is not selected
	  • -205, Command not valid in current state
	  • -224, Illegal parameter value	

:SOURce:WARMup?

Description	Returns the status of the option to warm up a source wavelength for upcoming measurements.	
Input	:SOURce:WARMup?	
Result	*<status>*	
Parameters	**Description**	**Value/Range of Values**
<status>	Status of the option	• None • *<wavelength>*
Example	`:SOUR:WARM?` `1550`	
Busy?	—	

Error Messages	• Standard error codes (see Error codes) and warning codes (see Warning codes)
	• Command-specific error codes:
	  • -204, Invalid while cassette is not selected
	  • -205, Command not valid in current state	

:SOURce:WAVelength

Description	Sets a single source wavelength to use for measurements. **Note:** You can use the :SOURce:LIST command to set one or more source wavelengths to use for measurements.	
Input	:SOURce:WAVelength <*wavelength*>	
Parameters	**Description**	**Value/Range of Values**
<*wavelength*>	Wavelength (nm)	Use :SOURce:WAVelength:AVAilable? or :CONFig? to get the list of available wavelengths.
Example	`:SOUR:WAV 1310`	
Busy?	—	

Error Messages	• Standard error codes (see Error codes) and warning codes (see Warning codes)
	• Command-specific error codes:
	  • -204, Invalid while cassette is not selected
	  • -205, Command not valid in current state
	  • -224, Illegal parameter value	

:SOURce:WAVelength?

Description	Returns the source wavelength used for measurements. **Note:** You can use the :SOURce:LIST? command to return the source wavelengths used for measurements.	
Input	:SOURce:WAVelength?	
Result	<*wavelength*>[,*wavelength*]	
Parameters	**Description**	**Value/Range of Values**
<*wavelength*>	Wavelength (nm)	—
Example	`:SOUR:WAV?` `1310`	
Busy?	—	

Error Messages	• Standard error codes (see Error codes) and warning codes (see Warning codes)
	• Command-specific error codes:
	  • -204, Invalid while cassette is not selected
	  • -205, Command not valid in current state	

:SOURce:WAVelength:AVAilable?

Description	Returns the source wavelengths available on the PCT module.	
Input	:SOURce:WAVelength:AVAilable?	
Result	*<wavelength>,…,<wavelength>*	
Parameters	**Description**	**Value/Range of Values**
<wavelength>	Wavelength (nm)	—
Example	`:SOUR:WAV:AVA?` `1310,1490,1550,1625`	
Busy?	—	

Error Messages	• Standard error codes (see Error codes) and warning codes (see Warning codes)
	• Command-specific error codes:
	  • -204, Invalid while cassette is not selected
	  • -205, Command not valid in current state	

:SYSTem:WARNing?

Description	Returns the first code written to the cassette warning queue. **Note:** Supported on the PCT module (mORL cassette) only.	
Input	:SYSTem:WARNing?	
Result	*<code>,<description>*	
Parameter	**Description**	**Value/Range of Values**
code	Code number	See "Warning codes" on page C-1.
<description>	Code description	

Examples	• `:SYST:WARN?`
	`-24, "Invalid ORL zone"`
	• `:SYST:WARN?`
	`0, "No warning"`	

Busy?	—	
Error Messages	Standard error codes (see Error codes) and warning codes (see Warning codes)	

OPM commands

:FETCh:LOSS?

Description	Returns the insertion loss (IL) value for the current measurement setup. **Notes:** • Live mode must be enable on the PCT module (see :SENSe:POWer:MODE). • The calculation will use the reference measurement obtained for the current measurement setup.	
Input	:FETCh:LOSS?	
Result	*<IL>*	
Parameters	**Description**	**Value/Range of Values**
<IL>	IL value (dB)	• *<value>* • - - - - - - - (invalid reference or measurement)
Example	`:FETC:LOSS?` `5.027`	
Busy?	—	

Error Messages	• Standard error codes (see Error codes) and warning codes (see Warning codes)
	• Command-specific error codes:
	  • -204, Invalid while cassette is not selected
	  • -205, Command not valid in current state	

:FETCh:ORL?

Description	Returns the optical return loss (ORL) value. **Note:** • Live mode must be enable on the PCT module (see :SENSe:POWer:MODE). • The calculation will use the reference measurement obtained for the current measurement setup.	
Input	:FETCh:ORL?	
Result	*<ORL>*	
Parameters	**Description**	**Value/Range of Values**
<ORL>	ORL value (dB)	• *<value >* • - - - - - - - (invalid reference or measurement)
Example	`:FETC:ORL?` `65.40`	
Busy?	—	

Error Messages	• Standard error codes (see Error codes) and warning codes (see Warning codes)
	• Command-specific error codes:
	  • -204, Invalid while cassette is not selected
	  • -205, Command not valid in current state	

:FETCh:POWer?

Description	Returns the optical power value. **Note:** Live mode must be enable on the PCT module (see :SENSe:POWer:MODE).	
Input	:FETCh:POWer?	
Result	*<power>*	
Parameters	**Description**	**Value/Range of Values**
<power>	Power value (dBm)	• *<value>* • - - - - - - - (TOO LITTLE LIGHT) • +++++++ (TOO MUCH LIGHT)
Example	`:FETC:POW?` `-15.348`	
Busy?	—	

Error Messages	• Standard error codes (see Error codes) and warning codes (see Warning codes)
	• Command-specific error codes:
	  • -204, Invalid while cassette is not selected
	  • -205, Command not valid in current state
	  • -224, Illegal parameter value	

:SENSe:POWer:DARK

Description	Starts a dark power measurement for each available power range. **Notes:** • The measurement value represents the optical *noise*, which is removed from subsequent power samples. • The dark power measurement value is preserved over reset/power cycles. **Important:** The optical input aperture must be tightly sealed to prevent light penetration. If there is too much light for an accurate dark reading in any power range,
Feature	**Description**
Input	:SENSe:POWer:DARK
Example	`:SENS:POW:DARK`
Busy?	Yes

Error Messages	• Standard error codes (see Error codes) and warning codes (see Warning codes)
	• Command-specific error codes:
	  • -204, Invalid while cassette is not selected
	  • -205, Command not valid in current state
	  • -206, Command not valid during measurement

:SENSe:POWer:DARK?

Description	Returns status information about the dark measurement value.	
Input	:SENSe:POWer:DARK?	
Result	*<status>*	
Parameters	**Description**	**Value/Range of Values**
<status>	Dark measurement value status	• 0 = False. A valid measurement has not been performed since the last PCT module reset. Either the factory-set dark measurement value or the last valid dark measurement value obtained is in use. • 1 = True. A valid dark measurement has been performed since the last PCT module reset.
Example	`:SENS:POW:DARK?` `0`	
Busy?	—	

Error Messages	• Standard error codes (see Error codes) and warning codes (see Warning codes)
	• Command-specific error codes:
	  • -204, Invalid while cassette is not selected
	  • -205, Command not valid in current state	

:SENSe:POWer:DARK:FACTory

Description	Restores the factory-set dark measurement value.
Input	:SENSe:POWer:DARK:FACTory
Example	`:SENS:POW:DARK:FACT`
Busy?	—

Error Messages	• Standard error codes (see Error codes) and warning codes (see Warning codes)
	• Command-specific error codes:
	  • -204, Invalid while cassette is not selected
	  • -205, Command not valid in current state
	  • -206, Command not valid during measurement

:SENSe:POWer:MODE

Description	Sets the status of the Live mode option.	
Input	:SENSe:POWer:MODE <*mode*>	
Parameters	**Description**	**Value/Range of Values**
<*status*>	Status of the option	• 0 = Disable • 1 = Enable
Example	`:SENS:POW:MODE 1`	
Busy?	—	

Error Messages	• Standard error codes (see Error codes) and warning codes (see Warning codes)
	• Command-specific error codes:
	  • -204, Invalid while cassette is not selected
	  • -205, Command not valid in current state
	  • -224, Illegal parameter value	

:SENSe:POWer:MODE?

Description	Returns the status of the Live mode option.	
Input	:SENSe:POWer:MODE?	
Result	*<status>*	
Parameters	**Description**	**Value/Range of Values**
<status>	Status of the option	• 0 = Disabled • 1 = Enabled
Example	`:SENS:POW:MODE?` `1`	
Busy?	—	

Error Messages	• Standard error codes (see Error codes) and warning codes (see Warning codes)
	• Command-specific error codes:
	  • -204, Invalid while cassette is not selected
	  • -205, Command not valid in current state	

Appendix A Common SCPI commands

Command	Description
*CLS	Clears the SCPI error queue, and the Standard Event Status (ESR) and Standard Status Byte (STB) registers.
*ESE	Returns the contents of the Standard Event Status Enable (ESE) register.
*ESE?	Sets the bits in the Standard Event Status Enable (ESE) register.
*ESR?	Returns the contents of the Standard Event Status (ESR) register.
*IDN?	Returns identification information (manufacturer, cassette type, cassette serial number, and firmware version) for the cassette. For example, `Viavi Solutions,PCT,129,4.3.3`.
*OPC	Initiates monitoring of pending operations.
*OPC?	Returns the value of the Operation Complete (OPC) bit of the Standard Event Status register.
*RCL	Recalls the system state assigned to a state-management number.
*RST	Restarts the cassette and restores all factory settings.
*SAV	Saves and assigns the system state to a state-management number.
*SRE	Sets the bits in the Service Request Enable (SRE) register.
*SRE?	Returns the contents of the Service Request Enable (SRE) register.
*STB?	Returns the contents of the Standard Status Byte (STB) register.
*TST?	Initiates a self-test of the cassette and returns the results.
*WAI	Stops the execution of commands until the Operation Complete (OPC) bit of the Standard Event Status register is set to 1.

*CLS

Description	Stops the monitoring of pending operations, and clears the SCPI error queue and the following registers (see IEEE 488.2 registers on page D-1): • Standard Event Status • Status Byte
Input	*CLS
Example	`*CLS`
Busy?	N/A
Error Messages	Standard error messages

*ESE

Description	Sets the bits in the Standard Event Status Enable (ESE) register (see IEEE 488.2 registers on page D-1).	
Input	*ESE *<integer>*	
Parameters	**Description**	**Value/Range of Values**
integer	An integer that corresponds to the binary-weighted sum of the bits in the register	0 (default) to 255

Example	The following example sets the ESE register bits to 00100000:
	`*ESE`
	`32`	

Busy?	N/A	
Error Messages	Standard error messages	

*ESE?

Description	Returns the contents of the Standard Event Status Enable (ESE) register (see IEEE 488.2 registers on page D-1).	
Input	*ESE?	
Response	*<integer>*	
Parameters	**Description**	**Value/Range of Values**
integer	An integer that corresponds to the binary-weighted sum of the bits in the register	0 (default) to 255
Example	`*ESE?` `32`	
Busy?	N/A	
Error Messages	Standard error messages	

*ESR?

Description	Returns the contents of the Standard Event Status (ESR) register (see IEEE 488.2 registers on page D-1).	
Input	*ESR?	
Response	*integer*	
Parameters	**Description**	**Value/Range of Values**
integer	An integer that corresponds to the binary-weighted sum of the bits in the register	0 to 255
Example	`*ESR`	
Busy?	N/A	
Error Messages	Standard error messages	

*IDN?

Description	Returns equipment identification information.
Input	*IDN?
Response	*<manufacturer>,<platform>,<id>,<firmware>*
Parameters	**Description**
<manufacturer>	Name of manufacturer
<platform>	Mainframe platform
<id>	Serial number
<firmware>	Firmware version
Example	`*IDN?` `VIAVI,MAP-300,3100011,0.0.119`
Busy?	N/A
Error Messages	Standard error messages

*OPC

Description	Initiates the monitoring of pending operations and sets the value of the OPC bit in the Standard Event Status register (see Table on page A-3).
Input	*OPC
Example	`*OPC`
Busy?	N/A
Error Messages	Standard error messages

*OPC?

Description	Returns the value of the Operation Complete (OPC) bit of the Standard Event Status register (see *ESR? on page A-3) only after all pending operation are complete.
Input	*OPC?
Response	1
Example	`*OPC?` `1`
Busy?	N/A
Error Messages	Standard error messages
Note: *OPC? always returns the value 1.	

*RCL

Description	Recalls the status of the system and all applications assigned to a state-management number (see *SAV on page A-5).	
Input	*RCL <*integer*>	
Parameters	**Description**	**Value/Range of Values**
integer	Assigned state-management number	0 to 6 **Note:** The following numbers recall default system states: • 0 = Factory default settings • 1 = Power off
Example	`*RCL 0`	
Busy?	N/A	
Error Messages	Standard error messages	

*RST

Description	Performs a reset to default (factory) values. Note the following: • Only unlocked applications are reset to factory values. • Software (processes) running on the controller are not restarted. • TCP/IP connections, socket servers and clients are maintained. • The system-level (controller) ESR, ESE, SRE, and STB registers and error queue settings are not affected. • All other registers and variables are reset to default values
Input	*RST
Example	`*RST`
Busy?	N/A
Error Messages	Standard error messages

*SAV

Description	Saves and assigns the system state to a state-management number.	
Input	*SAV <*integer*>	
Parameters	**Description**	**Value/Range of Values**
integer	State-management number	2 to 6 Note: The following numbers are reserved and cannot be overwritten: • 0 = Factory-default settings • 1 = Power off
Example	`*SAV 5`	
Busy?	N/A	
Error Messages	Standard error messages	

*SRE

Description	Sets the bits in the Service Request Enable (SRE) register (see IEEE 488.2 registers on page D-1).	
Input	*SRE <*integer*>	
Parameters	**Description**	**Value/Range of Values**
integer	An integer that corresponds to the binary-weighted sum of the bits in the register	0 to 255
Example		
Busy?		
Error Messages	Standard error messages	

*SRE?

Description	Returns the contents of the Service Request Enable (SRE) register (see IEEE 488.2 registers on page D-1).	
Input	*SRE?	
Response	<*integer*>	
Parameters	**Description**	**Value/Range of Values**
integer	An integer that corresponds to the binary-weighted sum of the bits in the register	0 (default) to 255
Example	`*SRE?` `0`	
Busy?	N/A	
Error Messages	Standard error messages	

*STB?

Description	Returns the contents of the Standard Status Byte register (see Standard Status Byte register on page D-2).	
Input	*STB?	
Response	*<integer>*	
Parameters	**Description**	**Value/Range of Values**
integer	An integer that corresponds to the binary-weighted sum of the bits in the register	0 to 255
Example	`*STB?` `32`	
Busy?	N/A	
Error Messages	Standard error messages	

*TST?

Description	Initiates a self-test of the controller and returns the results.	
Input	*TST?	
Response	*<integer>*	
Parameters	**Description**	**Value/Range of Values**
integer	Result of the self-test	• 0 = Pass • 1 = Fail
Example	`*TST?` `1`	
Busy?	N/A	
Error Messages	Standard error messages	

*WAI

Description	Stops the execution of commands until the Operation Complete (OPC) bit in the Standard Event Status (ESR) register is set to 1 (TRUE), which indicates that there are no pending operations (see IEEE 488.2 registers on page D-1).
Input	*WAI
***WAI**	
Busy?	N/A
Error Messages	Standard error messages

Appendix B Error codes

Code	Message	Code	Message
-100	Command error	-141	Invalid character data
-101	Invalid character	-144	Character data too long
-102	Syntax error	-148	Character data not allowed
-103	Invalid separator	-150	String data error
-104	Data-type error	-151	Invalid string data
-105	GET not allowed	-158	String data not allowed
-108	Parameters not allowed	-160	Block data error
-109	Missing parameters	-161	Invalid block data
-110	Command header error	-168	Block data not allowed
-111	Header separator error	-170	Expression error
-112	Program mnemonic too long	-171	Invalid expression
-113	Undefined header	-178	Expression data not allowed
-114	Header suffix out of range	-180	Macro error
-120	Numeric data error	-181	Invalid outside macro definition
-121	Invalid character in number	-183	Invalid inside macro definition
-123	Exponent too large	-184	Macro parameter error
-124	Too many digits	-200	Execution error
-128	Numeric data not allowed	-201	Invalid while in local
-130	Suffix error	-202	Settings lost due to RTL
-131	Invalid suffix	-203	Command protected
-134	Suffix too long	-210	Trigger error
-138	Suffix not allowed	-211	Trigger ignored
-140	Character data error	-212	Arm ignored

Code	Message	Code	Message
-213	Init ignored	-273	Illegal macro label
-214	Trigger deadlock	-274	Macro parameter error
-215	Arm deadlock	-275	Macro definition too long
-220	Parameter error	-276	Macro recursion error
-221	Settings conflict	-277	Macro redefinition not allowed
-222	Data out of range	-278	Macro header not found
-223	Too much data	-280	Program error
-224	Illegal parameter value	-281	Cannot create program
-225	Parameter out of memory	-282	Illegal program name
-226	Lists not same length	-283	Illegal variable name
-227	Invalid address or no card inserted	-284	Program currently running
-230	Data corrupt or stale	-285	Program syntax error
-231	Data questionable	-286	Program runtime error
-232	Invalid format	-290	Memory use error
-233	Invalid version	-291	Running out of memory
-240	Hardware error	-292	Referenced name does not exist
-241	Hardware missing	-293	Referenced name already exists
-250	Mass storage error	-294	Incompatible type
-251	Missing mass storage	-300	Device-specific error
-252	Missing media	-310	Device system error
-253	Corrupt media	-311	Device memory error
-254	Media full	-312	PUD memory lost
-255	Directory full	-313	Calibration memory lost
-256	File name not found	-314	Save/recall memory lost
-257	File name error	-315	Configuration memory lost
-258	Media protected	-320	Storage fault
-260	Expression error	-321	Storage out of memory
-261	Math error in expression	-330	Self-test failed
-270	Macro error	-340	Calibration failed
-271	Macro syntax error	-350	Queue overflow
-272	Macro execution error	-360	Communication error

Code	Message	Code	Message
-361	Parity error in program message	-410	Query INTERRUPTED
-362	Framing error in program message	-420	Query UNTERMINATED
-363	Input buffer overrun	-430	Query DEADLOCKED
-380	OPM Gain switch timeout	-440	Query UNTERMINATED after indefinite response
-381	OPM Acquisition timeout	-500	Power on: The instrument has detected an off-to-on transition in its power supply.
-382	OPM Data logging is busy	-600	User request: The instrument has detected the activation of a user request local control.
-383	OPM Data logging trigger is not ready	-700	Request control: The instrument requested to become the active IEEE 488.1 controller-in-charge.
-384	OPM TEC error	-800	Operation complete: The instrument has completed all selected pending operation in accordance with the IEEE 488.2, 12.5.2 Synchronization Protocol.
-400	Query error	—	—

Appendix C Warning codes

Code	Message	Code	Message
0	No Warning	-23	Error upgrading OPM firmware
-1	Configuration has changed since last power -up	-24	Invalid ORL zone
-2	Module is not calibrated	-25	Could not open database
-3	MTJ usage exceeds limit - please exchange	-26	Error adding record into tblAquisition table
-4	Reference measurement not taken	-27	Error adding record info tblMeasurement table
-5	Reference validity expired	-28	Error updating tblAcquisition table
-6	Single MTJ reference is required	-29	Error setting up port mapping function
-7	Receive jumper length is not specified	-30	Error performing port mapping table
-8	Laser interlock is engaged	-31	Could not find output port for input channel N
-9	Specified MTJ length is much different from measured valued.	-32	Could not load port mapping table
-10	Measured DUT length is undetermined	-33	Invalid port map path
-11	End of fiber is undetermined	-34	Error resetting OPM range setting
-12	Internal error. Measurement canceled	-35	Specified MTJ IL is much different from measured value
-13	ORL measurement could not be completed	-36	License is required for Dual Switch operation
-14	Error calculating calibrated ORL value	-37	PCT is currently busy – measurement request denied
-15	ILF Zone not set up properly	-38	Reference detector has too little power
-20	Error performing OPM dark measurement	-39	Reference detector has too much power
-21	Error resetting OPM dark to factory setting	-40	Error adding record into tblTestPortMap table
-22	Error upgrading OPM bootloader	-41	Front Panel Power Ratio is not calibrated

Code	Message	Code	Message
-42	Launch path loss is high	-55	License is required for external switch operation
-43	Launch path loss is too low. Front Panel Power Ratio calibration is required	-56	Measured value is out of expected range
-44	Laser operation interrupted during scan	-57	Event channel server failed to initialize
-45	ISU upgrade is required for proper operation	-58	Error backing up database
-46	FO upgrade is required for proper operation	-59	Remove directory unavailable... file saved to /PCT/remote/
-47	OPM upgrade is required for proper operation	-60	Failed saving CSV results file
-48	Both switches have the same MAP address	-61	Remote OPM Pairing step is not done
-49	Launch Switch setup is required for override	-62	Database is getting large. Consider new database
-50	Receive Switch setup is required for overrrisde	-63	Flash is getting full. Move data off unit using File Manager
-51	Loopback setup is required for override	-64	Loopback length difference is too large. Invalid measurement
-52	References are invalid with new range setting	-65	IL measurement timing error
-53	References are invalid with change in Low Power mode	-66	Measurement is stuck. ESD CONDITION
-54	Invalid Front Panel Distance calibration	—	—

Appendix D IEEE 488.2 registers

The MAP-300 Series platform implements IEEE 488.2-defined standard registers, which provide a system for reporting and reading status and event information (Reading and writing information). The reporting system consists of four 8-bit registers, an input queue, and an output queue, which are grouped as follows:

- Status registers, which contain information about the state of a MAP-300 Series component:
  - Standard Status Byte register
  - Standard Event Status register
- Enable registers, which are masks that determine the types of evens that are reported:
  - Service Request Enable register
  - Standard Event Status Enable register

Figure D-1 on page D-2 shows the interaction between Status and Enable registers.

Note: The controller has its own set of registers, which are updated for system-level commands only. There is only one set of registers for all applications. All commands sent to an application through multiple user connections will operate the same set of registers, which can result in conflicts.

Figure D-1: Interaction between Status and Enable registers

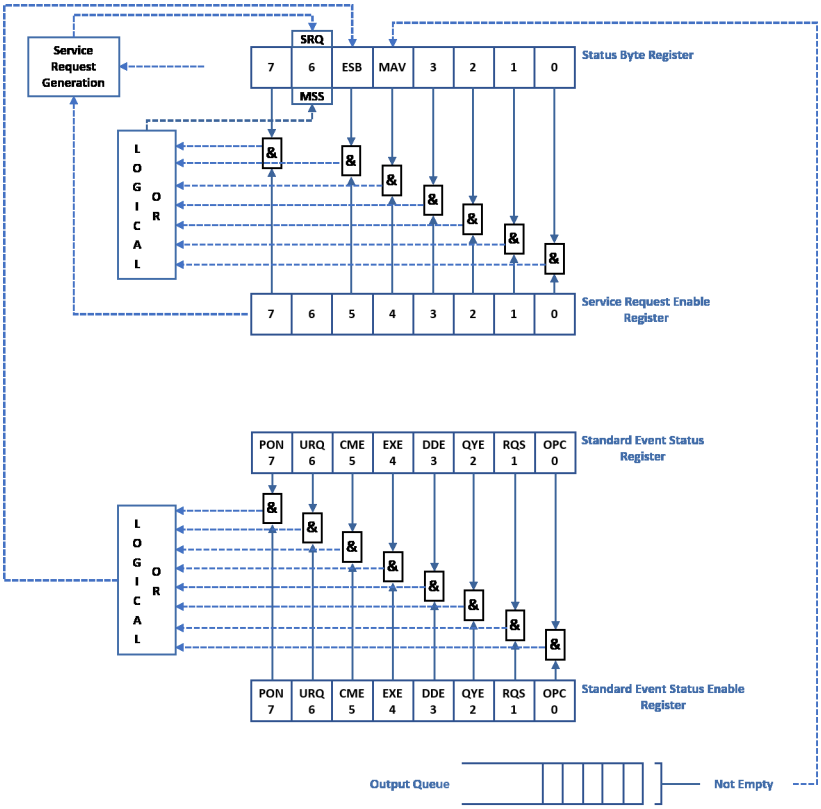

Standard Status Byte register

Each bit in the Status Byte (STB) register is enabled or disabled via the corresponding bit in the Service Request Enable register. Enabled bits are set to 1 (TRUE). You can determine which events have occurred by reading the bits in the SRE register.

Table D-1: Status Byte Register

Bit	Description
0	N/A
1	N/A
2	Errors Available (EAV)
3	N/A
4	Message Available (MAV)
5	Event Summary Bit (ESB)
6	Request for Service (SRQ)
	Master Summary Bit (MSB)
7	N/A
Note: Bits 0, 1, and 7 are not supported and always return 0.	

Standard Event Status register

Each bit in the Standard Event Status (ESR) register is associated with a specific state. When a state change (event) occurs, the corresponding bit in the register is set to 1 (TRUE). A bit in the ESR register is enabled or disabled via the corresponding bit in the Standard Event Status Enable register.

Table D-2: ESR register

Bit	Description
0	Operation Compete (OPC)
1	Request Control (RQC)
2	Query Error (QYE)
3	Device Dependent Error (DDE)
4	Execution Error (EXE)
5	Command Error (CME)
6	User Request (URQ)
7	Power On (PON)
Note: Bits 1, 3, and 6 are not used and always return 0.	

Service Request Enable register

The bits of the Service Request Enable (SRE) register determine which bits of the Standard Status Byte register register are set to TRUE (1).

Table D-3: SRE register

Bit	Description
0	N/A
1	N/A
2	Error Available (EAV)
3	Questionable Summary Bit (QSB)
4	Message Available (MAV)
5	Event Summary Bit (ESB)
6	N/A
7	Master Summary Status (MSS)
Note: Bits 0, 1, and 6 are not used and always return 0.	

Standard Event Status Enable register

The bits of the Standard Event Status Enable (ESE) register determine whether the Event Summary bit (Bit 5) in the Standard Status Byte register is set to TRUE (1). That is, if a bit is TRUE in the ESE register and the corresponding bit in the Standard Event Status register is TRUE, the Event Summary bit will also be TRUE.

Table D-4: ESE register

Bit	Description
Bit 0	Operation Compete (OPC)
Bit 1	Request Control (RQC)
Bit 2	Query Error (QYE)
Bit 3	Device Dependent Error (DDE)
Bit 4	Execution Error (EXE)
Bit 5	Command Error (CME)
Bit 6	User Request (URQ)
Bit 7	Power On (PON)
Note: Bits 1, 3, and 6 are not used and always return 0.	

Reading and writing register information

Table D-5 lists the common IEEE 488.2 commands used to read and write Status and Event register information.

Table D-5: IEEE-488 command for reading and writing register information

Register	Operation	Command
ESE	Read	*ESE?
	Write	*ESE
ESR	Read	*ESR?
	Write	—
SRE	Read	*SRE?
	Write	*SRE
STB	Read	*STB?
	Write	—

Appendix E Mnemonics

Mnemonic	Description	Mnemonic	Description
BBS	Broadband laser source	PCT	Passive Component Tester
EDFA	Erbium doped fiber amplifier	PCX	Polarizer cassette
EMP	Empty slot	SCS	Small-count optical switch (legacy)
FPL	Fabry Perot laser	SMA	MAPA+23 smart attenuator (legacy)
INV	Invalid cassette	SPN	Extended
LCS	Large-count optical switch (legacy)	SRC	Source cassette
OA	Optical amplifier	TBF	Tunable filter (legacy)
OFA	Optical fiber amplifier	TFX	Tunable filter module
OPM	Optical power meter (OPM and OPM-A)	TLG	Tunable laser grid
OPM-B	Optical power meter B	TLS	Tunable laser source
OPM-C	Optical power meter C	UTL	Utility cassette
OSA	Optical spectrum analyzer	UVL	Unavailable slot
OSW	Optical switch	VOA	Variable optical attenuator
OSX	Optical matrix switch	VBR	Variable backreflection controller
PCS	Polarization controller		

Appendix F Document revision history

Table 1: Passive Component Testing (PCT) for MAP Series Programming Guide, 22112369-346

Revision	Date	Details
R002	October 2025	Added the following command descriptions: • :MEASure:HELix and :MEASure:HELix? • :MEASure:ILLA and :MEASure:ILLA?
R001	May 2024	• Updated the section “Common cassette commands” • Removed the command description :MEASure:SEIL:CONFig
R000	November 2023	This document is released. It replaces the section “Remote Commands” in the *MAP Series mORL-A1, mIL-A2 and PCT Application Framework Installation and User Guide*, 22112369-260.

Multiple Application Platform

Passive Component Testing (PCT) for MAP Series Programming Guide

Programming Guide

22112369-346 R002, Standard
October 2025
English

VIAVI Solutions Inc.
1445 South Spectrum Blvd., Suite 102
Chandler, AZ, 85286
USA

North America: (Toll Free) 1-844-GO-VIAVI / 1-844-468-4284
All Other Regions: www.viavisolutions.com/contacts